This is a digital copy of a book that was preserved for generations on library shelves before it was carefully scanned by Google as part of a project to make the world's books discoverable online.

It has survived long enough for the copyright to expire and the book to enter the public domain. A public domain book is one that was never subject to copyright or whose legal copyright term has expired. Whether a book is in the public domain may vary country to country. Public domain books are our gateways to the past, representing a wealth of history, culture and knowledge that's often difficult to discover.

Marks, notations and other marginalia present in the original volume will appear in this file - a reminder of this book's long journey from the publisher to a library and finally to you.

Usage guidelines

Google is proud to partner with libraries to digitize public domain materials and make them widely accessible. Public domain books belong to the public and we are merely their custodians. Nevertheless, this work is expensive, so in order to keep providing this resource, we have taken steps to prevent abuse by commercial parties, including placing technical restrictions on automated querying.

We also ask that you:

+ *Make non-commercial use of the files* We designed Google Book Search for use by individuals, and we request that you use these files for personal, non-commercial purposes.

+ *Refrain from automated querying* Do not send automated queries of any sort to Google's system: If you are conducting research on machine translation, optical character recognition or other areas where access to a large amount of text is helpful, please contact us. We encourage the use of public domain materials for these purposes and may be able to help.

+ *Maintain attribution* The Google "watermark" you see on each file is essential for informing people about this project and helping them find additional materials through Google Book Search. Please do not remove it.

+ *Keep it legal* Whatever your use, remember that you are responsible for ensuring that what you are doing is legal. Do not assume that just because we believe a book is in the public domain for users in the United States, that the work is also in the public domain for users in other countries. Whether a book is still in copyright varies from country to country, and we can't offer guidance on whether any specific use of any specific book is allowed. Please do not assume that a book's appearance in Google Book Search means it can be used in any manner anywhere in the world. Copyright infringement liability can be quite severe.

About Google Book Search

Google's mission is to organize the world's information and to make it universally accessible and useful. Google Book Search helps readers discover the world's books while helping authors and publishers reach new audiences. You can search through the full text of this book on the web at `http://books.google.com/`

Library
of the
University of Wisconsin

WORKING DRAWINGS
OF
MACHINERY

BY

WALTER H. JAMES

ASSISTANT PROFESSOR OF MECHANICAL ENGINEERING DRAWING
MASSACHUSETTS INSTITUTE OF TECHNOLOGY

AND

MALCOLM C. MACKENZIE

INSTRUCTOR IN MECHANICAL ENGINEERING
MASSACHUSETTS INSTITUTE OF TECHNOLOGY

FIRST EDITION
FIRST THOUSAND

NEW YORK
JOHN WILEY & SONS, INC.
LONDON: CHAPMAN & HALL, LIMITED
1913

COPYRIGHT, 1913,
BY
W. H. JAMES AND M. C. MACKENZIE

Stanhope Press
F. H. GILSON COMPANY
BOSTON, U.S.A.

180271
DEC 22 1913
TC
J23

1395743

PREFACE

THIS book has been planned especially to meet the needs of the second and third year students who are studying drawing in the Department of Mechanical Engineering at the Massachusetts Institute of Technology. The authors hope, however, that the material is of such a nature and is presented in such a way that it will partly fill the need which has always existed of a book devoted especially to machine drawing, suitable for use in technical schools and as a reference book for practical draftsmen.

It is not an elementary text book of mechanical drawing, but rather a treatise on the application of mechanical drawing to the describing or designing of machinery.

The assumption is made that the reader is already familiar with the use of drawing tools and has some knowledge of the principles of projections.

The aim in the preparation of the book has been as follows: First, to give a correct conception of the character and purpose of a working drawing. Second, to suggest the relation between a pictorial drawing of an object and its orthographic projections in such a way that the student will naturally fall into the habit of forming a mental picture of a piece when he sees its orthographic projections, and vice versa. Third, to illustrate good modern practise in methods of representation, dimensioning, drafting room systems and the like and to call attention to some of the points to be considered in connection with these matters. Fourth, to suggest the method of attacking some of the problems in design or investigation which the draftsman so often meets. Fifth, to explain briefly, from the standpoint of the engineer rather than the architect or artist, a few of the common methods of pictorial representation, particularly mechanical perspective.

Thanks are due to a large number of manufacturers and engineers who have responded to requests for information. Acknowledgment is also made of the assistance rendered by the authors' associates at the Institute who have contributed much in the way of criticism and suggestion.

W. H. J.
M. C. M.

BOSTON, *September*, 1913.

CONTENTS

PAGE

INTRODUCTION vii

CHAPTER I.

GENERAL PRINCIPLES 1

CHAPTER II.

CONVENTIONAL REPRESENTATIONS 12

CHAPTER III.

DIMENSIONING AND DESCRIBING 21

CHAPTER IV.

SKETCHING 55

CHAPTER V.

THE SCALE DETAIL DRAWING 62

CHAPTER VI.

GENERAL DRAWINGS 81

CHAPTER VII.

DESIGN DRAWINGS 85

CHAPTER VIII.

DIAGRAMMATIC DRAWINGS 92

CHAPTER IX.

MECHANICAL PICTORIAL DRAWING 101

APPENDIX 119

INDEX 141

INTRODUCTION

A working drawing of an object is a drawing which is intended to convey from one person to another certain information regarding that object. In this book we are dealing especially with working drawings of machinery. Such drawings may be divided into two groups: — General Drawings and Detail Drawings.

General Drawings give information more or less complete according to the necessities of the case about the machine as a whole, or some mechanism in the machine. They may be divided into the following groups: — Assembly Drawings, Outline Drawings, Design Drawings, Diagrammatic Drawings and Lay-out Drawings. These will be discussed in detail in the proper place.

Detail Drawings describe the individual pieces that make up the machine so that they may be constructed from the drawings. Such a drawing must first of all convey to the mind of the workman a clear and definite idea of the exact form of every part of the piece. Next, it must furnish complete and reliable dimensions. The dimensions should be the ones that would actually be used in constructing the piece and should be so placed on the drawing that they can be readily found and interpreted. Having conveyed to the workman's mind a conception of the form and size of the piece, the drawing must furnish all necessary information as to the material of which the piece is to be constructed and how it is to be finished.

In practice a draftsman may have the work come to him in either one of two ways; first, he may be required to make drawings of a machine which is already in existence and for which there are no drawings available, and second, his task may be that of making the drawings for a machine which is being designed, either making a complete design himself, or working up the drawings from a design made or at least outlined by some one else. In either case, the drawings will be divided into the two classes already mentioned, namely, the General Drawings and the Detail Drawings. The same rules govern the work whether the drawing is from an existing machine or a design. The exact order of procedure, however, necessarily differs in the two cases and the number

and kind of general drawings made by the designer may be different from the ones made to describe an existing machine.

Whatever the purpose of the drawing, the information given on it must be presented in such shape that the workman, or whoever is to use it, can understand it quickly and with certainty. To be of any value, therefore, a drawing must be clear, reliable, and complete enough to fulfil its purpose. The draftsman must aim first of all to produce a drawing which will conform to these requirements. A secondary consideration, but one of importance, is the cost of producing the drawing itself. The most efficient draftsman is the one who can make the best drawing in the least time. The word "best" must here be understood as referring not primarily to the workmanship of the drawing, but to the qualities just mentioned. Yet some attention must be given to the workmanship. A well-executed drawing is desirable in the same way that good penmanship is desirable in letter writing. Poor execution makes a drawing difficult to read. In some cases the workmanship is of great importance. For general purposes, however, a good, clear-cut, business-like appearance is to be desired.

If we look upon a working drawing as a business letter from one man to another, we can readily see that there must be certain general principles and usages which are common to all drawings in the same way that there are general principles and usages common to all business letters of the ordinary kind. In addition to these, each drafting room has its own particular methods and rules in matters of detail just as a business office does in its line. These methods conform to the principles covering all drawings, being merely that particular drafting room's way of adapting the rules to the requirements of its own special business. Furthermore, the personality of each individual draftsman, or at any rate each chief draftsman, is bound to enter in to some extent. The result of this is that every drafting room must have a system of its own based on certain broad general rules. No rule should be considered as absolutely inflexible, for sometimes the drawing can be made to best serve its purpose by making it an exception to the rule. When such a condition arises, the drawing should show plainly that it does break the accepted rules and in what respect.

Before one can learn to write a business letter, he must learn the language in which the letter is to be written. Similarly, before attempting the study of the several classes of general drawings and detail drawings, one must be familiar with the draftman's language; that is, he must

understand the fundamental principles of representation and the usual ways of conveying information by means of a drawing. Chapters I, II and III are intended to set forth these fundamental principles and usages, and chapters IV to VIII show their application to the work of describing or designing machinery.

The pictorial drawing given in chapter IX may be considered as auxiliary to the usual work of the draftsman.

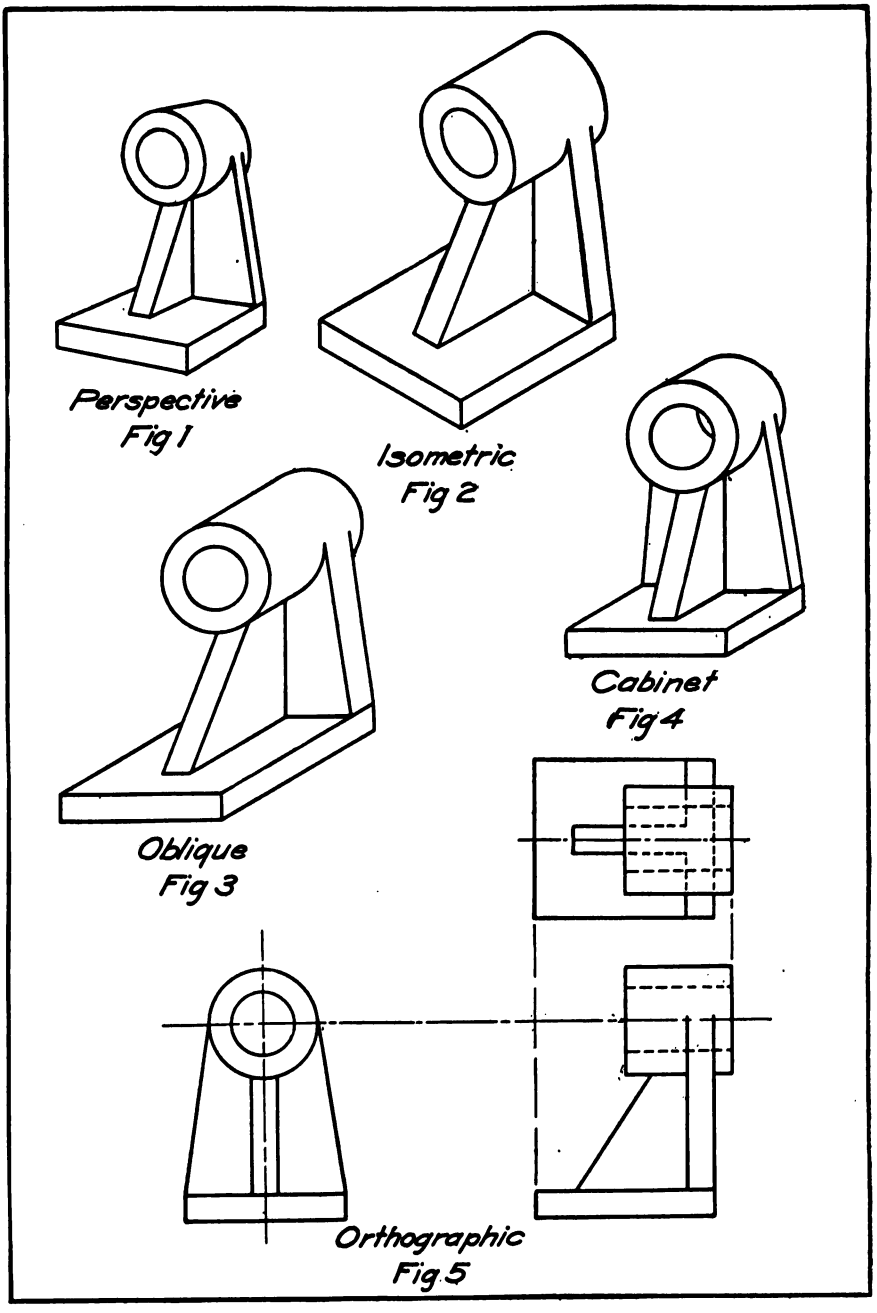
Perspective
Fig 1
Isometric
Fig 2
Cabinet
Fig 4
Oblique
Fig 3
Orthographic
Fig 5

WORKING DRAWINGS OF MACHINERY

CHAPTER I

GENERAL PRINCIPLES

When one looks at an object he usually sees two or three sides at the same time thus getting at once a mental conception of its shape and nature. A drawing representing the object exactly or approximately as seen under these conditions is called a perspective drawing or perspective view. Such a view may be sketched freehand, judging distances and proportions by eye, and in a general way suggesting the appearance of the piece; or it may be mechanically constructed, all proportions being accurately measured. If a perspective drawing is looked at with the eye in the proper position relative to the drawing, the observer receives practically the same impression as to form and size that he would when looking at the piece itself.

There are certain other kinds of drawings which in a sense are modifications of perspective but which are much easier to draw and which can be easily measured with a scale. These drawings are frequently referred to as axonometric drawings. The most common are Isometric Drawings, Oblique Projections, and Cabinet Drawings.

Figs. 1, 2, 3 and 4 are drawings of the same piece and show the difference in appearance of the four different kinds of drawings above mentioned. Fig. 1 is a perspective drawing, Fig. 2 an isometric drawing, Fig. 3 an oblique projection, and Fig. 4 a cabinet drawing. These and various other "pictorial" representations have their place in an engineer's work, and will be discussed more fully in a later chapter. Considerable labor is involved in making a drawing of a complicated piece by any one of the above methods, and it is difficult to show details completely and accurately.

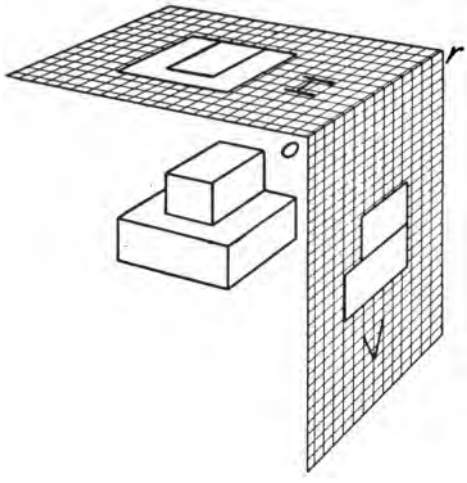

FIG. 6.

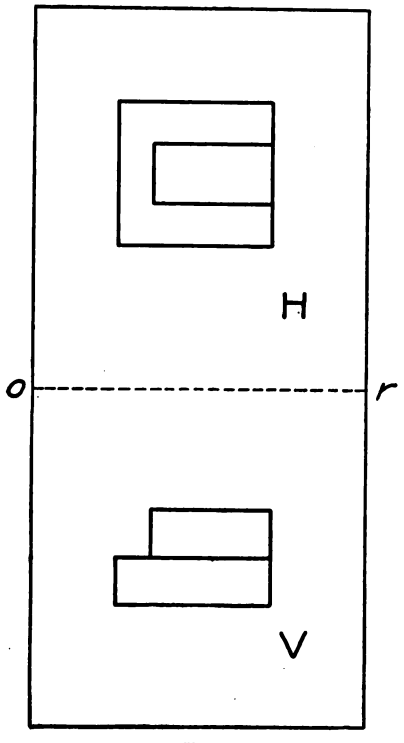

FIG. 7.

For these reasons another method is used for ordinary work, the "one view" representations above mentioned being employed for making clear details not easily shown by the common methods, or for showing objects so that they may be quickly understood by a person who has not the time to study out an ordinary drawing, or by some one not accustomed to reading drawings.

Fundamental Idea of Projection. Fig. 5 is an orthographic projection drawing of the piece shown in Figs. 1 to 4. Machine drawings are usually made in orthographic projection as this is by far the easiest way to represent a machine or machine part. It is, therefore, important that the student acquire at the outset facility in "thinking" projection drawings. When looking at an object he should be able to quickly picture in his mind how the projections of that object would appear. Conversely when he sees the several projection views of a piece his mind should have the power of so associating those views with each other that the result would be a mental picture of the piece.

Figs. 6 and 7 illustrate the fundamental principles of orthographic projection. In Fig. 6

the object is represented as located in the angle formed by two transparent planes V and H which intersect at 90 degrees. The draftsman is supposed to look squarely at the object through each of the planes in turn, drawing on each plane the lines of the object as they appear when seen through that plane. Another way of stating the same idea is to say that from the end of every line on the object, perpendic-

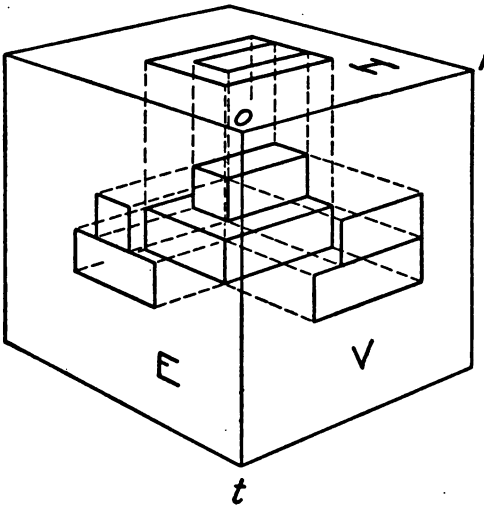

FIG. 8.

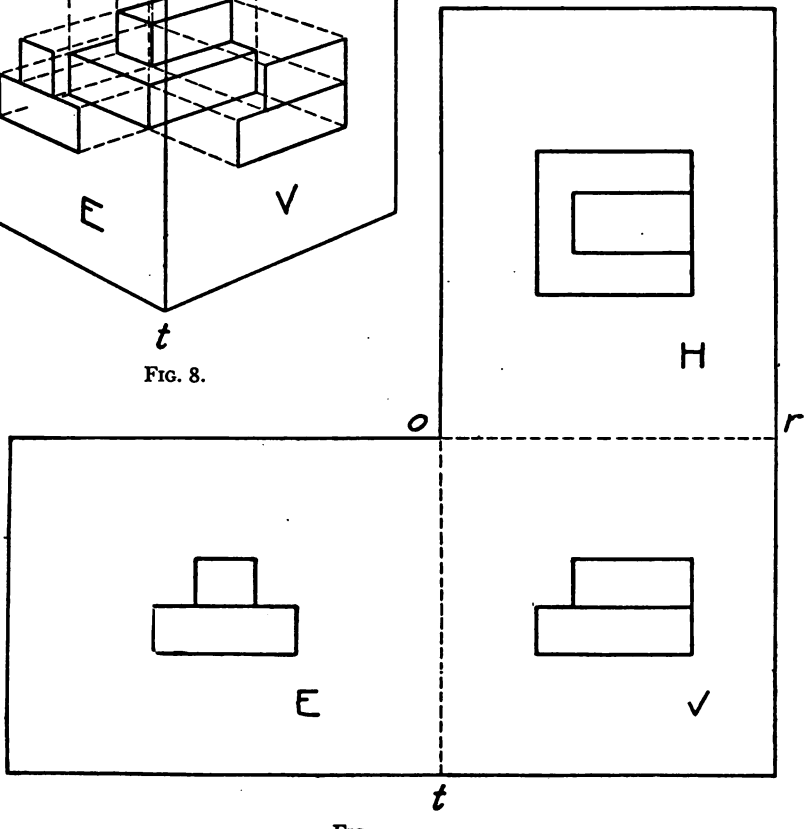

FIG. 9.

ulars are dropped to the various planes and the drawing is made by joining the points thus found. The drawing resulting on the plane V is called the elevation; that on the plane H, the plan. When the two views are completed, the plane H is supposed to swing up about the

corner *or* until it comes into the same plane with *V*. A person looking perpendicular to *V* would then see the two original planes with their respective views as they are shown in Fig. 7.

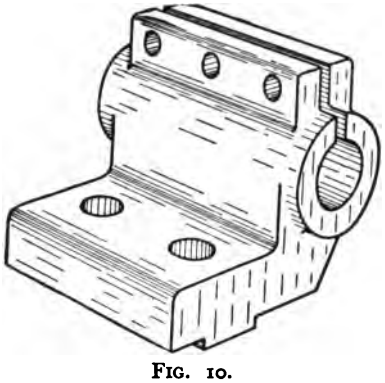

FIG. 10.

In Fig. 8 the same object is represented as located in an angle formed by three transparent planes, *V*, *H* and *E*, each of which intersects the other two at angles of 90 degrees like three adjacent sides of a box. The views on planes *V* and *H* are the same as in Fig. 6. A third view is obtained by drawing on the plane *E* the object as it appears when looked at through that plane. The plane *H* is then swung up about *or* as before and the plane *E* is swung out about *ot* until it also comes into the same plane with *V*. Fig. 9 shows the three planes flattened out in this way. The drawing on *V* is now called the front elevation; that on *H*, the plan, and that on *E*, an end or side elevation.

This discussion is to be understood merely as illustrating the principle,

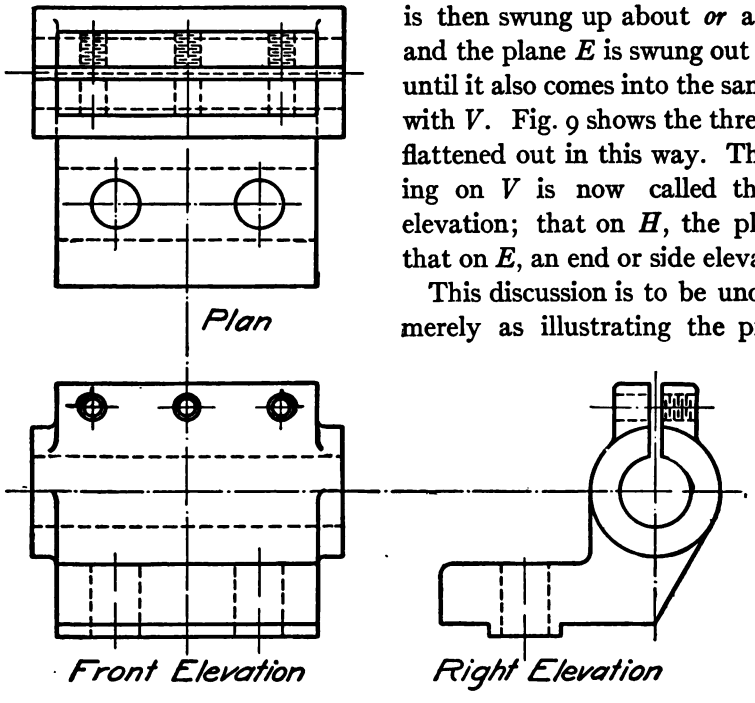

FIG. 11.

for the draftsman's paper is of course one plane surface and he has to imagine one part of it as representing plane *V*, the part above that the

plane H, etc. Then as he draws on the different parts which are supposed to represent the different planes, he may imagine the position of the eye to be changed each time so as to see the proper side of the object.

Relative Location of Views. It is to be noted that the above method of considering the drawing brings the various views in the following positions with relation to each other: — Treating the front elevation as the principal view, the plan is directly above it, the left elevation at the left, and the right elevation at the right. If other views were required

FIG. 12.

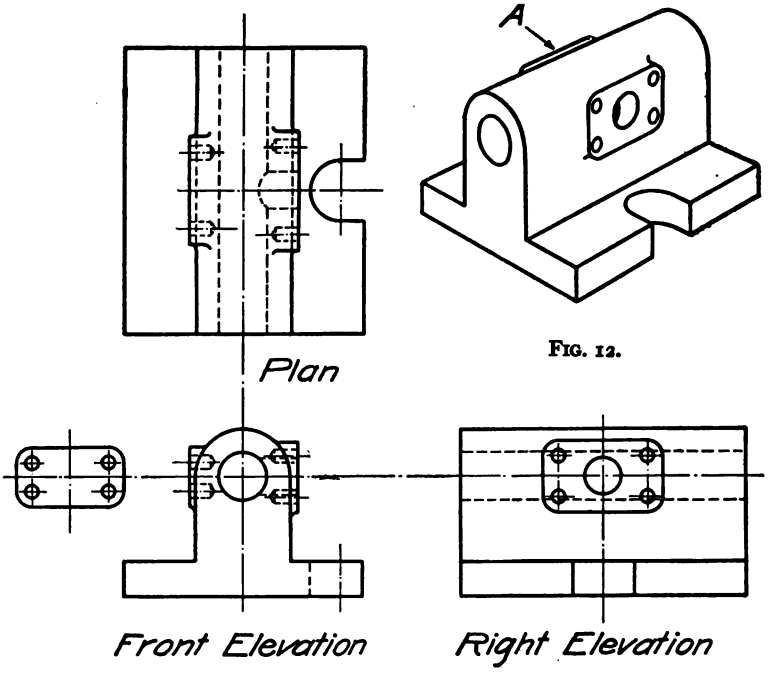

FIG. 13

a view of the bottom would be beneath the front elevation, a rear view would be placed at the right of the right elevation or at the left of the left elevation. If this arrangement of views is adhered to strictly, it is possible to identify the views without having them marked. Many drafting rooms, however, mark the views so that there can be no question as to what each view represents.

Fig. 10 is a perspective view of a small casting and Fig. 11 a projection drawing of the same piece. By adding to Fig. 11 the dimensions which would be necessary to construct the piece, and other necessary data as to material, finish, etc., this would become a complete detail drawing.

Projection Planes Not at Right Angles. While the above is the basis for the practice of showing pieces in orthographic projection, some modifications are occasionally necessary. One important variation which is not uncommon is the practice of showing the projection on planes not at right angles to each other. This is particularly common in the case of partial views, which will be considered later.

Selection of Views. In deciding how many and what views of an object to make, the draftsman must use his judgment as no fixed rule can be given. In general, it is safe to say that those views should be made which most clearly show the object, being sure that enough views are made, but, on the other hand, avoiding superfluous views.

Partial Views. Oftentimes a certain number of views, as for example three, will completely show all parts of a piece except some small detail which requires an additional view. In such a case the additional view may be a partial view. In Fig. 13 the front and right elevations and plan show all that is necessary to be shown concerning the form of the piece drawn in perspective in Fig. 12, except the boss at *A*. To show this fully a view from the left is needed. A left elevation of the whole piece would not give any more information than is already given in the other three views. Accordingly a left elevation of the boss alone is shown.

In the case of a very complicated piece a number of these partial views may well be shown, thus making every detail clear and yet avoiding the labor and confusion of a large number of complete views. As was suggested earlier in the chapter, the partial view is often made at an angle oblique with the principal view or views. (See Fig. 14, also Fig. 22.)

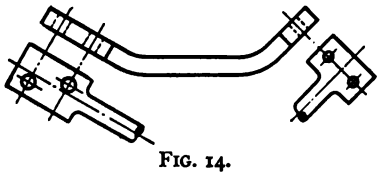

FIG. 14.

Invisible Parts. Referring again to Fig. 11 it will be noticed that certain lines are dotted, that is, the lines instead of being continuous are made up of short dashes or dots. These are the "invisible lines." To make this clearer, let us take a simpler piece such as that shown in Figs. 15 and 16, Fig. 16 being the projections of the piece shown in Fig. 15.

The groove *A*, which appears in the front elevation as part of a rectangle cannot be seen at all when the piece is looked at from above. Consequently it cannot appear in full lines in the plan view. It is, however, necessary that the groove be shown in the plan. Therefore the dotted lines *cd* and *ef* are put in to represent respectively the left-

hand and right-hand sides of the groove. Similarly in the right elevation, the dotted line *mn* represents the upper surface of the groove *A* and in the front elevation the dotted line *hg* represents the lower contour of the semicircular groove *B*.

Practice varies as to the number of dotted lines shown on a piece. On detail drawings it is customary to put in practically all of the invisible lines. On a complicated piece this may make the drawing look confusing, but if the dotted lines are put in neatly and made finer than the full lines, they will not obscure the main outlines and they may

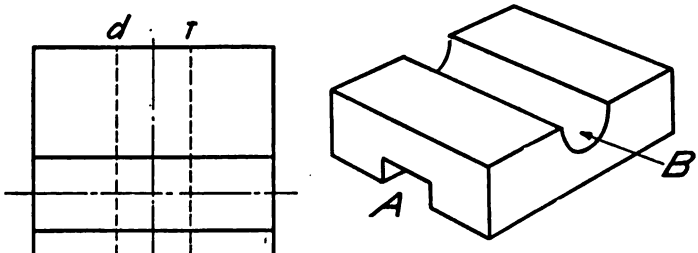

FIG. 15.

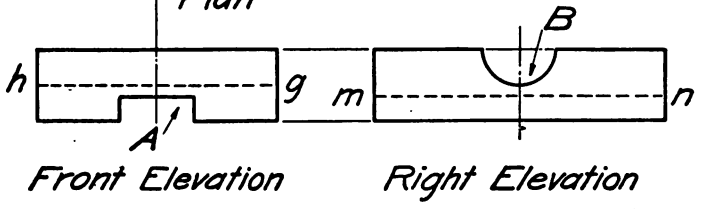

FIG. 16.

enable one to study out complicated details with greater ease and certainty than would otherwise be possible. On an assembly drawing only such dotted lines are put in as are necessary to make the drawing serve its purpose.

Sections. While the dotting in of all invisible lines results in complete projections of a given piece, the dotted lines alone may not render the construction of the interior of a complicated piece entirely clear. For example, a casting may be of irregular shape and be cored out, with various stiffening ribs. A sufficient number of views, with all the invisible parts dotted in each view, would make it possible for a person

to understand the drawing after considerable time had been spent in studying it. Nevertheless, the confusion of dotted lines might make the process very difficult. The drawing would be much easier to read if some of the views were sectional views.

A sectional view may be defined as a projection drawing of that portion of the piece remaining after it has been cut by a plane parallel to the projection plane, the part of the piece between the cutting plane and the draftsman's eye having been removed. Figs. 17 and 18 illustrate the sectioning of a simple piece. Fig. 17 consists of an elevation and bottom view of the piston of a gasoline engine with the inside lines dotted.

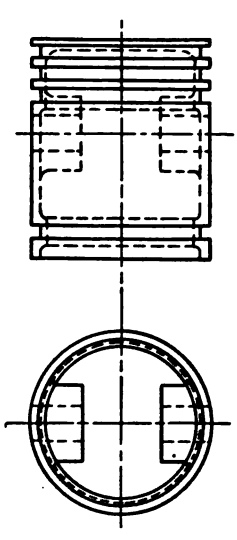

FIG. 17.

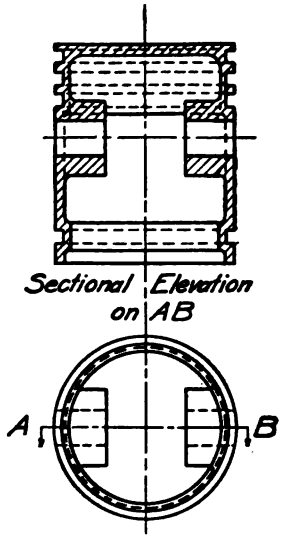

FIG. 18.

In Fig. 18 the same piston is shown with the elevation made in section. The cutting plane is the plane whose horizontal trace is the line AB. In this particular case, since the piece is not especially complicated the two views shown in Fig. 17 are perhaps clear enough. Nevertheless the details of the internal construction stand out much more prominently in Fig. 18.

It is important that a sectional drawing be clearly marked so that there may be no doubt as to the location of the cutting plane. For example, in Fig. 18 the sectional view is marked "Sectional Elevation on AB." Here AB is the trace of the cutting plane on the other coördinate plane and is shown and lettered in the other view. A special line is

used for this purpose unless it coincides with one of the principal center lines. Pointers as shown are desirable to indicate clearly the direction in which the section is being looked at.

Partial Sections. Sometimes the unsectioned view seems to be on the whole the best to use in the case of a particular piece but there may be at a certain part of the piece some interior construction which would best be shown in a section. Under these circumstances a partial section may be used to good advantage. Figs. 19 and 20 illustrate two cases where partial sections are convenient. In Fig. 19 the boss *A* on the front side of the piece needs to be shown whereas on the right side of the piece the boss *B* which is inside can be better shown by a partial section. Similarly in Fig. 20 the front elevation is necessary to show the outside details and a section on the line *AB* is also necessary to show clearly the coring at the right side. A complete cross-section is not needed, however, hence the partial section.

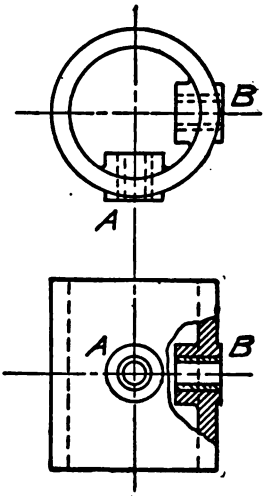

FIG. 19.

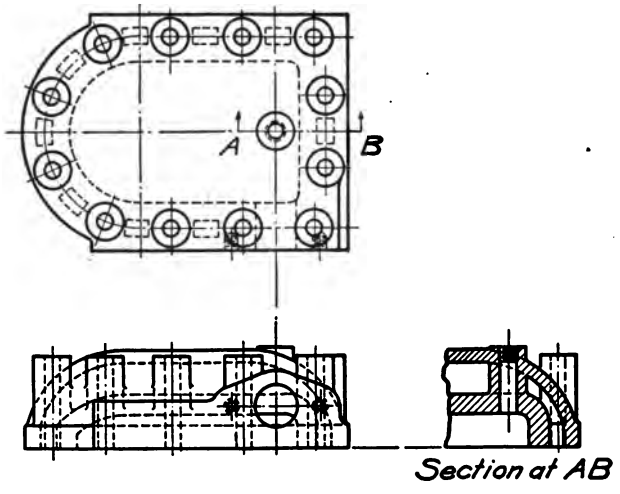

FIG. 20.

Turned-up Section. Fig. 21 illustrates a method sometimes used for showing the shape of any portion of a piece which is not clearly shown

in the other views. The two crosshatched parts are imaginary thin slices cut across the piece at the planes *AB* and *CD* and laid over into the plane of the paper. In other words, the shape of the cross-section at *AB* is shown by the section turned up at that place and similarly with regard to the shape of the cross-section at *CD*. The original view is drawn complete, just as it would be if the sections were not turned up on it. Sometimes this section is drawn in full lines as in Fig. 21, sometimes with dotted outline and full crosshatching, and sometimes both outlines and crosshatching are dotted.

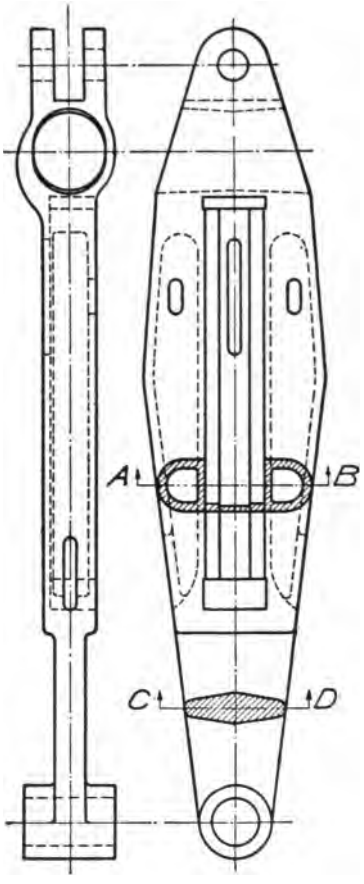

FIG. 21.

Turned-up sections are very convenient for showing the shape of pulley arms, webs, and the like. A turned-up section may be put out to one side if more convenient as shown in Fig. 22.

Crosshatching. Those parts of the piece which are cut by the section plane are shaded as shown on the several drawings to which reference has been made. This shading when done by the use of parallel lines is called crosshatching. Ordinarily different kinds of crosshatching are used for different materials although many drafting rooms crosshatch all materials alike. Practice varies somewhat in this connection. In the Appendix the crosshatchings which are perhaps most commonly used for the various materials are illustrated.

Sectioning Boiler Plate, Etc. In sectioning sheet metal, small pipe, or any object where the area cut is too small to crosshatch satisfactorily, the portions which would be crosshatched are commonly filled in solid. Examples of this are given in Fig. 23.

Stumping, Tinting, Etc. A good deal of time is consumed by the draftsman if he puts in much crosshatching. Accordingly the areas

which would be crosshatched are often "stumped" with a soft pencil. In the case of a drawing finished on paper the sections are sometimes tinted with India ink wash or in colors if desired.

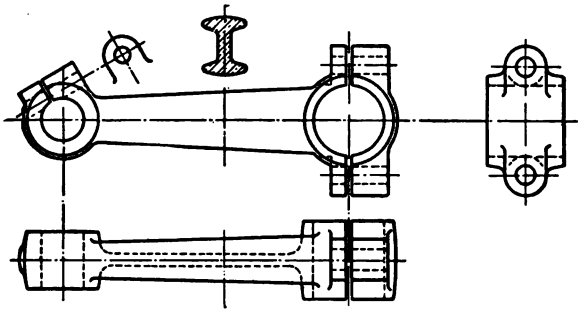

FIG. 22.

Connecting the Views. The several views of a piece when placed in direct projection with each other are connected by some means. The connection may be by means of center lines, extension lines, or a com-

FIG. 23.

bination of the two. The practice in this matter can be seen from an inspection of the various illustrations.

Kinds of Lines. For specimens of the various kinds of lines and the purposes for which they are used see Chapter V.

CHAPTER II

CONVENTIONAL REPRESENTATIONS

In any line of work there are certain kinds of machine parts which are used very frequently and consequently have to be shown on the drawings. If the exact representation of such parts involves much labor, thereby materially increasing the cost of the drawings, it is desirable, when possible, to adopt some simple signs, or " conventional representations " which will be generally understood as representing the parts in question. For example, it would require a good deal of work to make a true orthographic projection of a screw thread. Yet screws are of frequent occurrence in almost every machine and have to be indicated on the drawings. Hence they are usually shown by some " convention."

Conventional representations may be divided into two classes: — General Conventions and Special Conventions. General Conventions are those used and understood by practically all draftsmen and those who use the drawings. Special Conventions are the signs or short-cut representations used by some one drafting room or in some one line of work. This division is of course only a broad one, for as soon as some special convention is adopted by several parties and becomes more or less widely understood, it becomes to a certain extent general.

In this chapter it is our purpose to consider a few of the most common " general conventions," such as those used to represent screws, tapped holes, pipe threads and taps, springs, chains, etc.

Screw Threads. There are probably more methods in use for showing screws than for any other one thing. Even in the same drafting room, unless rigid rules are laid down, there may be several conventions used by different draftsmen. On Plates II to V are shown the principal conventions used for this purpose. It may seem that an undue amount of space is given here to the matter of screws, but the fact that all these conventions are used and used to so great an extent, seems to warrant their being shown here although the authors by no means recommend all of them.

V-Threads. Figs. 24 to 31 (Plate II) show several ways of representing V-threads. In each figure *A* is a side view of the screw, *B* an end

view of the threaded hole, *C* a side view of the piece containing the threaded hole with hole shown dotted, and *D* the same view as *C* except that the piece is sectioned on plane *M N* (see Fig. 24). Additional conventions for showing the threaded hole and for sectioning a piece which is threaded both on the outside and inside are given in Figs. 35 to 38, and will be discussed a little later. Figs. 24 to 34 are for the most part self-explanatory, but a few remarks may be of value. It will be noticed that the end view of the hole (view *B*) is the same for all the figures. In Fig. 24 is shown a very common method of representing a single right-hand V-thread. In view *A* we see that the points of the V's are represented by light lines running across the screw with a slant equal to one-half the pitch. That is, if a line (as shown dotted at *xy*) is drawn through one end of the thread line, perpendicular to the axis of the screw, it will pass through the middle of the space on the other contour. The bottom of the threads is shown by shorter and heavier lines, parallel to the others. These heavier lines should all terminate the same distance from the contour, this distance being a little less than the pitch. The dotted threads (view *C*) are drawn just like those on *A* except that all the dotted lines are of the same weight. When the nut is shown in section as at *D* the threads are drawn exactly as at *A* except that they slant down toward the right. This is because the front half of the thread is removed and we are looking at the threads on the back half. In the double thread, Fig. 25, the only change from Fig. 24 is the amount of slant given to the lines. In Fig. 26 the single left-hand thread is shown by the convention similar to the two preceding ones, the slant being in the opposite direction. No discussion of Figs. 27 to 31 seems necessary except to call attention to the fact that in Figs. 29, 30 and 31, no slant is given to the lines. Fig. 30 seems, on the whole, to be the most convenient of all because the lines are all of the same weight, thus avoiding the necessity of changing the setting of the drawing pen, and there is no slant so that they may be drawn directly with triangle and T-square.

Figures 32, 33 and 34 show the convention often used for screws of larger diameter, if the pitch is reasonably coarse.

Figure 35 illustrates a method sometimes used for showing the end view of a tapped hole. In certain cases, where it is perfectly clear that the hole is threaded, it may be represented as in Fig. 36. Fig. 37 also shows a method which has been used to a considerable extent for a tapped hole. There are many disadvantages about this representation which seem to make its use undesirable.

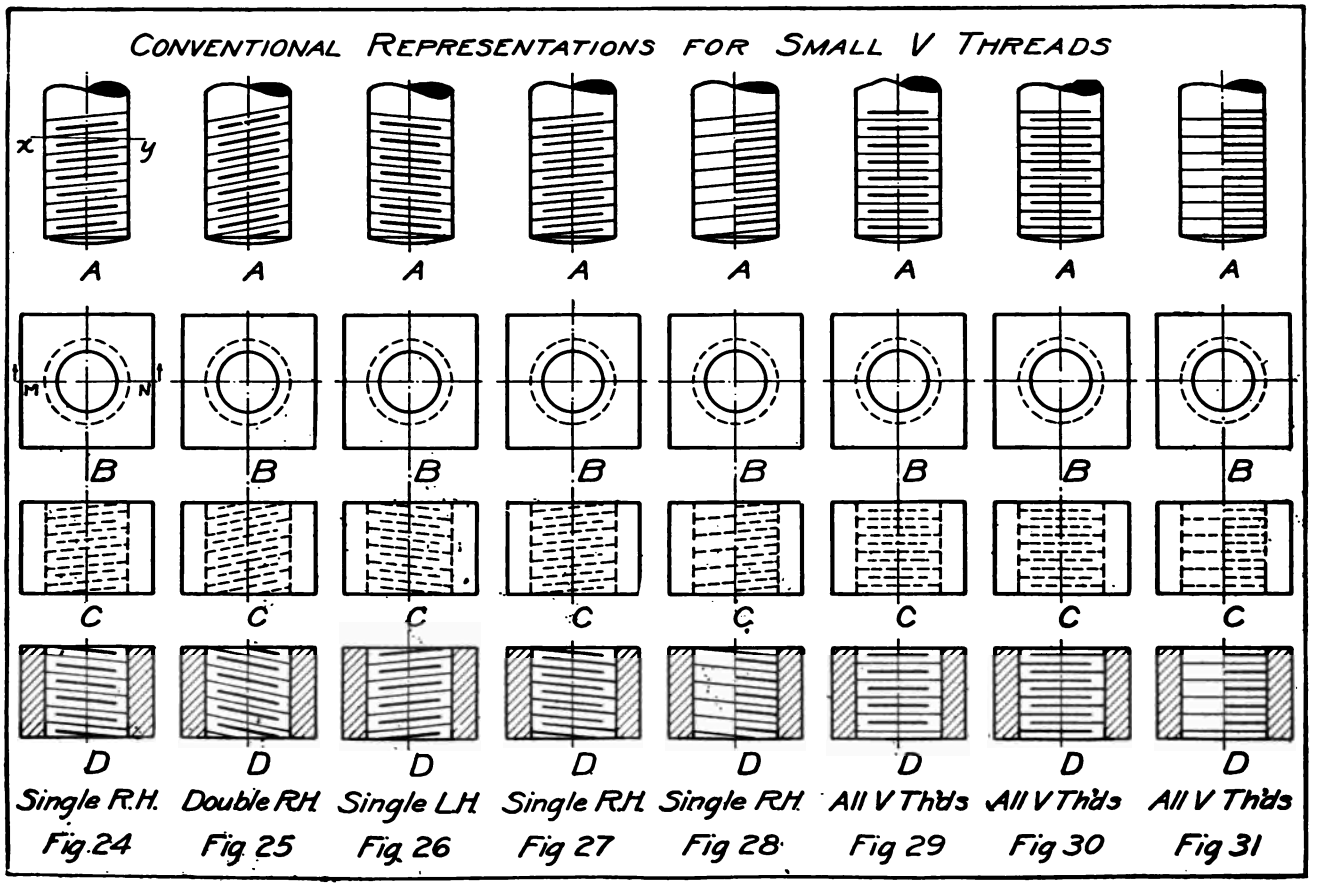
CONVENTIONAL REPRESENTATIONS FOR SMALL V THREADS
x
y
M
N
A
B
C
D
Single R.H.
Fig. 24
Double R.H.
Fig. 25
Single L.H.
Fig. 26
Single R.H.
Fig. 27
Single R.H.
Fig. 28
All V Thds
Fig. 29
All V Thds
Fig. 30
All V Thds
Fig. 31

PLATE II

CONVENTIONAL REPRESENTATIONS FOR LARGE V THREADS.

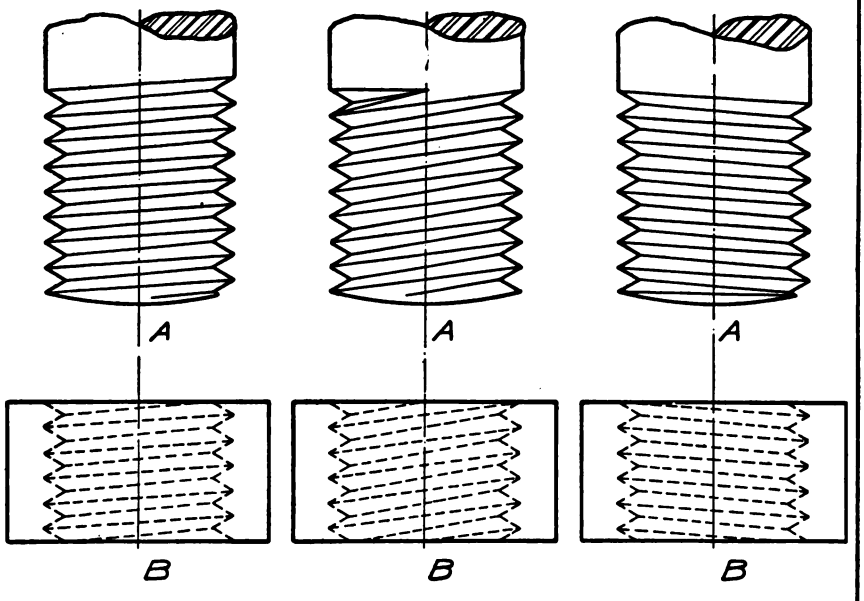

Single R.H. Fig 32 | Double R.H. Fig 33 | Single L.H. Fig 34.

ADDITIONAL CONVENTIONS FOR V THREADS.

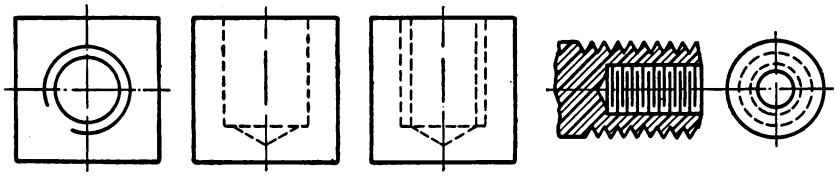

Fig 35 | Fig 36 | Fig 37 | Fig 38

CONVENTIONAL REPRESENTATIONS FOR SQUARE THREADS.

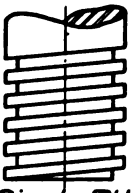

Single R.H.
Fig 39

Double R.H.
Fig 40

Triple R.H.
Fig 41

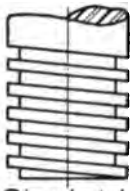

Single L.H.
Fig 42

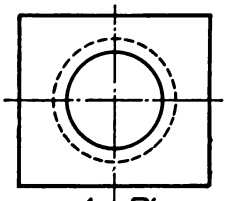

A Plan

B Elevation

C Section
Fig 43

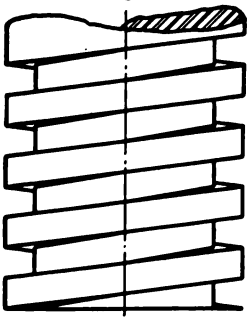

Fig 44

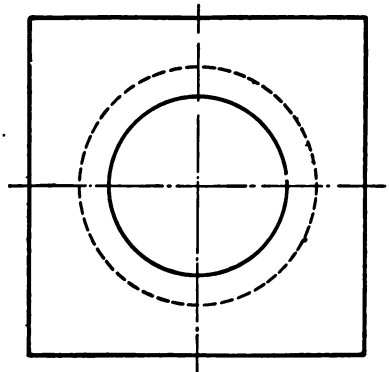

A Plan

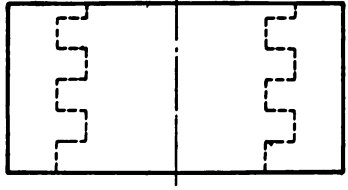

B Elevation

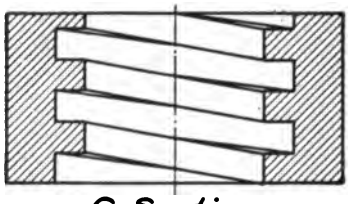

C Section
Fig 45

Conventional Representations for Acme Threads.

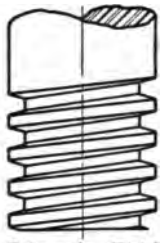

Single R.H.
Fig 46

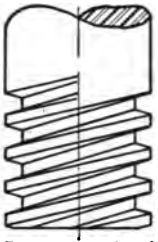

Double R.H.
Fig 47

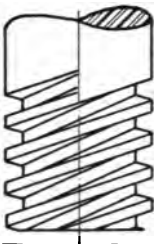

Triple R.H.
Fig 48

Single L.H.
Fig 49

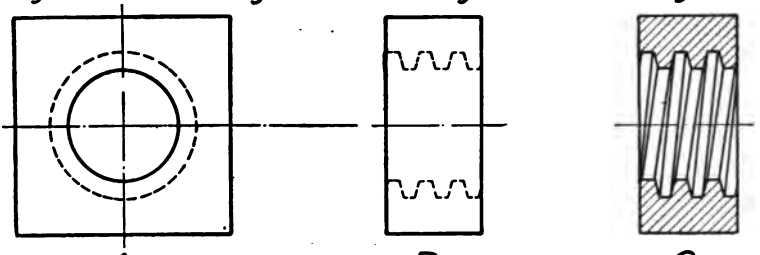

A B C

Fig 50

Conventional Representations for Pipe Threads.

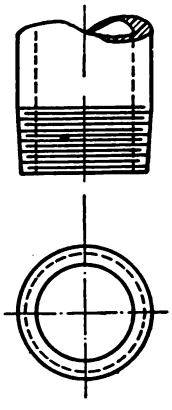

Fig 51

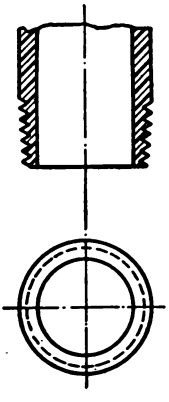

Fig 52

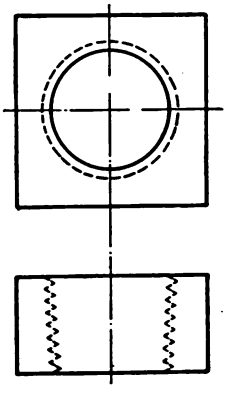

Fig 53

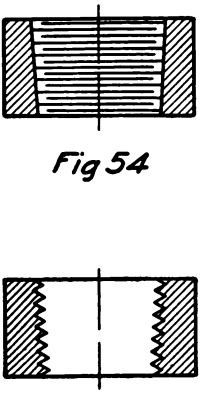

Fig 54

Fig 55

Square Threads. Figs. 39 to 42 illustrate the representation of small-diameter square-threaded screws and Fig. 43 illustrates the three different views of the threaded hole for the same. Fig. 44 illustrates a square-threaded screw of large diameter and Fig. 45 illustrates the nut corresponding.

Acme Threads. In Figs. 46 to 50 is shown the acme thread on a screw and in the hole. There are other conventions for the side elevation of the nut besides that shown in Fig. 50B, but that one is simple and seems to serve the purpose well.

Pipe Threads and Taps. Fig. 51 shows the threaded end of a pipe in side elevation and end view, and Fig. 52 the same in cross-section. Fig. 53 gives a convention for a hole tapped for a pipe, and Figs. 54 and 55 two ways of showing the same in section.

Special Threads. In representing a special thread one of the above conventions may be used (selecting the one representing the standard thread which most nearly resembles the " special thread " in question), this being supplemented by an enlarged detail.

Long Screws. When a screw is long, it is unnecessary to draw the conventional thread over the whole length of the screw. A few threads may be drawn at each end of the threaded portion.

Helical Springs. The ordinary helical springs, often erroneously called spiral springs, require much the same treatment on a drawing as do the

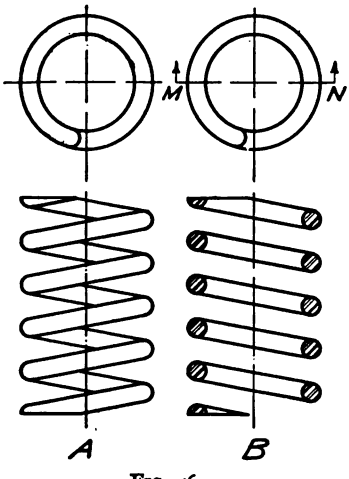

FIG. 56.

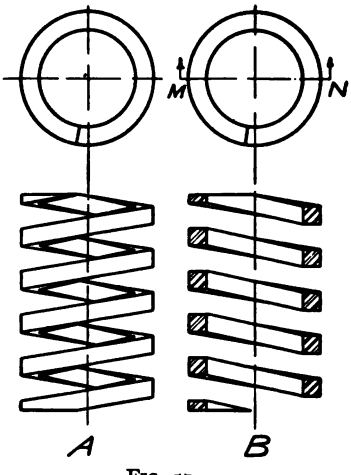

FIG. 57.

screw threads. Fig. 56 shows a helical spring of round wire. *A* is the spring in outside elevation, *B* the same spring sectioned on plane *MN*.

Fig. 57 is similar to Fig. 56 except that the spring is made of square stock. The choice as to use of the methods *A* and *B* depends upon the conditions. Ordinarily the unsectioned spring has a better appearance and is quite as easy to draw as the sectioned view.

Bolts and Nuts. Drawings of bolt heads and nuts are always more or less conventional, particularly in showing the chamfer. The figures in connection with Tables 1 and 2 of the Appendix illustrate this and also show convenient radii for drawing the arcs of circles which represent the chamfer.

Breaking Long Pieces. When a piece is long relative to its width and thickness or diameter, it is often convenient to draw the piece as if part

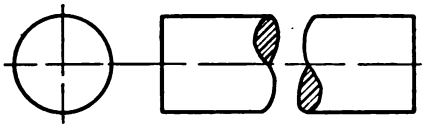

FIG. 58.

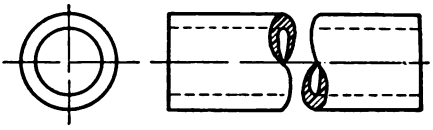

FIG. 59.

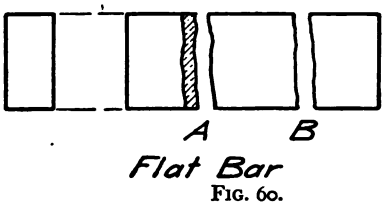

FIG. 60.

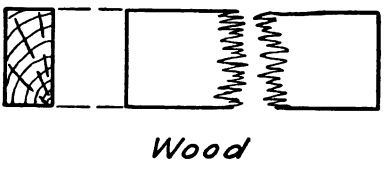

FIG. 61.

of it were broken out. When this is done, the break must be made at a place where there are no details that need to be shown. Figs. 58 to 61 illustrate this. In the case of the flat piece, Fig. 60, two ways of representing the break are shown at *A* and *B*, respectively.

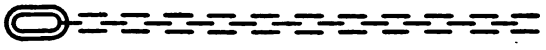

FIG. 62.

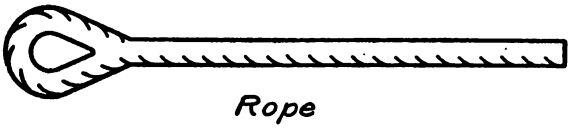

FIG. 63.

Chains and Ropes. Figs. 62 and 63 show convenient methods for representing chains and ropes respectively.

Bearings. It is very often desirable to indicate on the drawing of a shaft the places where bearings are to be located. This may be done by diagonal lines as shown in Fig. 64.

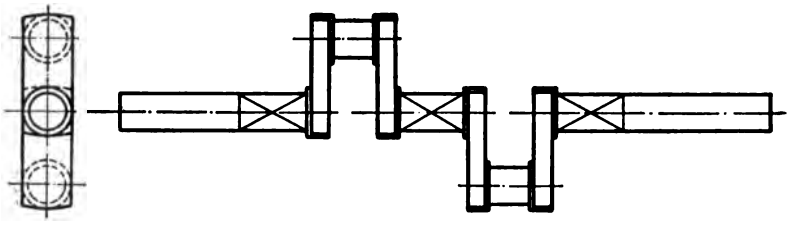

FIG. 64.

Webs, Etc. When a section is taken through a web, it is sometimes crosshatched as in Fig. 65.

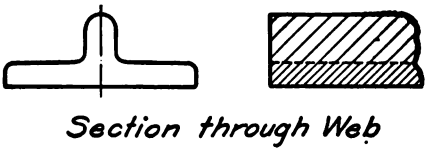

FIG. 65.

CHAPTER III

DIMENSIONING AND DESCRIBING

The bare drawing such as has been discussed up to this point serves only to convey to the mind a conception of the general form of all parts of the piece. The drawing should be approximately or exactly proportional so that a correct conception may be given. No reliance is placed on the accuracy of the drawing, however, to indicate the size and exact form of the piece. Neither does it give final information as to the material, manner of finishing, etc. These must be taken care of by figured dimensions and explanatory notes.

The proper dimensioning and describing of a piece is on the whole the most important and the most difficult part of the draftsman's work. With a fair knowledge of projections and a small amount of experience a man may be able to decide what views to use and how best to represent a piece. Much knowledge and experience are necessary, however, in order to dimension it and describe it accurately, clearly, and in such a way that the dimensions may be easily found and used by the various workmen who have a part in making the piece. The aim must be to give just those dimensions which are needed, to give them in such a place and such a way that they can be readily found and understood. To accomplish this result the draftsman needs to know the various steps in the process of manufacture of the piece, otherwise he cannot decide what dimensions are necessary, or at least most convenient, for the workman. With such knowledge he must combine good judgment both in deciding what dimensions to give and where to place them on the drawing. The same remarks apply of course to the use of explanatory notes. Here again, therefore, the personality of the draftsman enters in to an even greater extent than it does in the matter of deciding what views to show and how to show them. Here, however, as in the former case there are certain rules and customs which are general.

In the present chapter are shown proper methods of giving dimensions for cases which most commonly occur. The methods here represented are based on a careful inspection and comparison of the methods used by a considerable number of commercial drafting rooms and represent what seems a reasonable and fairly general practice.

General Example. Fig. 66 is a complete drawing of a rectangular piece with a rectangular hole through it and may be used as a starting point for considering the subject of dimensioning. First there are the outside dimensions of the piece, $1\frac{3}{4}''$ long, $1''$ wide and $\frac{5}{8}''$ thick. Then come the minor dimensions, in this case the location and size of the

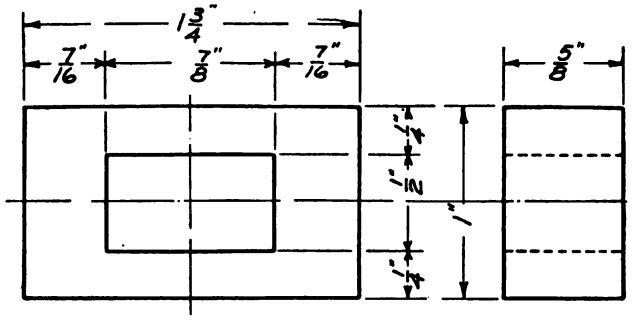

FIG. 66.

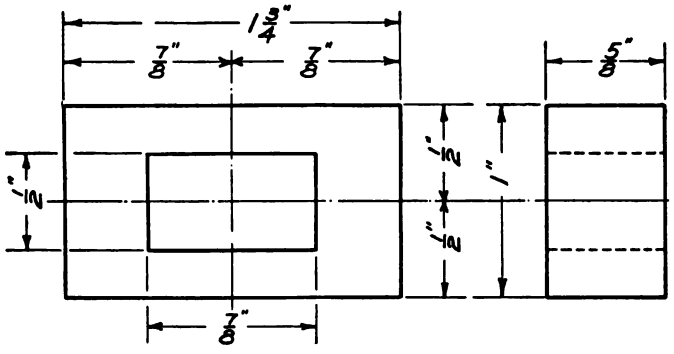

FIG. 67.

opening. Fig. 67 is the same as Fig. 66, except that the position of the rectangular opening is dimensioned to center lines instead of to the sides. In a piece of this sort there is little choice as to which method is better.

Position of Dimensions. As far as convenient the dimensions are placed off the views. The lines between which a dimension is to be given are prolonged by "extension lines." (See Chapter V.) The extension lines

must not connect with the main lines, a gap of about $\frac{1}{32}$" intervening. A dimension line is drawn between the two extension lines. Arrowheads are placed at the ends of the dimension lines, the points of the arrowheads terminating exactly on the lines between which the dimension is given.

If the space between the two lines is too small to allow for both the figure and the arrowheads, the arrowheads are placed as in Fig. 68A, and if the space is too small even for that the method in Fig. 68B is used.

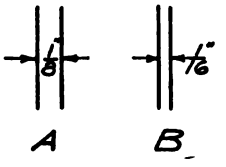

FIG. 68.

The over-all dimension (notice the $1\frac{3}{4}$" in Fig. 66) is placed outside the smaller dimensions. The figures read from the bottom or right-hand side of the drawing according as the dimension lines are horizontal or vertical. The instructions about material, number needed and finish will be referred to later.

It is well to adopt some system of putting the figures always in the same place as far as possible. By following regular rules in this way there is less danger of omitting dimensions and less difficulty in finding them.

Figures should, if possible, be placed where they can be erased without disturbing the lines of the drawing. In a simple object like that in Fig. 66 where only two views are shown, there is little choice as to the view on which a given dimension shall be placed. In a more complicated drawing, however, where several views or partial views are made, a dimension might be placed in any one of several places. The question then arises "Where shall it be put?" The answer in general would be to put it where it can most conveniently be found. Dimensions which are related should be given in the same view. For example, if a hole is being dimensioned, the length, width, and location of the hole should be on the same view. Further illustrations of the proper distributing of dimensions can best be obtained from an inspection of the drawings which follow.

Repetition of Dimensions. It is seldom advisable to repeat a dimension. If it is given in one view that is sufficient. In the case of a complicated drawing, this rule is sometimes departed from if reading the drawing can be made easier by so doing.

Feet and Inches. Practice varies in the matter of when to give a dimension in inches and when in feet and inches. Many drafting rooms use inches up to and including 24 inches, above that giving in feet and

inches, thus: 2 feet 4 inches. Others give in inches up to 36 and still others up to 72 or even higher. In some special work such as pulley and gear diameters, certain engine dimensions, sheet-metal work, and some structural work the dimensions are all given in inches. There are various ways for writing the dimension. If it is in inches it is usually written thus: 2″ or in special cases 2 in. Where all dimensions are understood to be in inches the sign ″ may be omitted entirely as is done in Figs. 103 to 124. If feet and inches are given they should be thus: 2 ft. 4″ or 2′–4″. In the latter case a good space is left between the feet and inches and a dash about $\frac{3}{16}$″ long inserted. Where the dimension is wholly in feet it is written thus: 9 ft. 0″ or 9′–0″ and when in feet and a fraction of an inch thus: 9 ft. $0\frac{3}{8}$″ or 9′–$0\frac{3}{8}$″.

When Drawing is at Reduced Scale. The dimensions must indicate the actual size of the piece itself, regardless of the scale of the drawing. If some portion of the drawing is not drawn to scale as, for example, if it is decided to change a certain dimension after the drawing is made it is advisable to call attention in some way to the fact that the figured dimension and the scale do not agree. This may be done by adopting some standard mark for such a case as, for example, a line beneath the figure, or by putting beneath the figure in small letters these words: *Not to scale.* The underlining is more common.

Decimals. If the nature of the work is such that the workman can and ought to use hundredths and thousandths of an inch the fractions are given in decimals. This would be the case where gage or micrometer is to be used.

Examples. Instructions for showing the dimensions for the various cases which are commonly met with can best be given by examples. As has already been suggested, no hard and fast rules can be given to cover varying conditions. Moreover, two men of equal ability might not dimension a piece in exactly the same way. Therefore, the examples here given must be considered as representing good general practice and not as indicating the only right way. It will be noticed that many of the drawings are at a reduced scale. The fact that the matter of scale has not yet been discussed should cause no difficulty here as the main subject now under consideration is that of dimensioning.

In discussing these examples, particularly the simpler ones, each drawing will be referred to as illustrating some definite feature. The same feature will, of course, appear in many of the other drawings and the student, when looking up any special point, should refer to several

of the drawings besides the one mentioned. In this way he will get the broader application of each principle.

Cylindrical Pieces. A plain cylindrical piece with a drilled hole concentric with the outside of the cylinder may be dimensioned as in Fig. 69 or the end view may be omitted as in Fig. 70, and only the side view given,

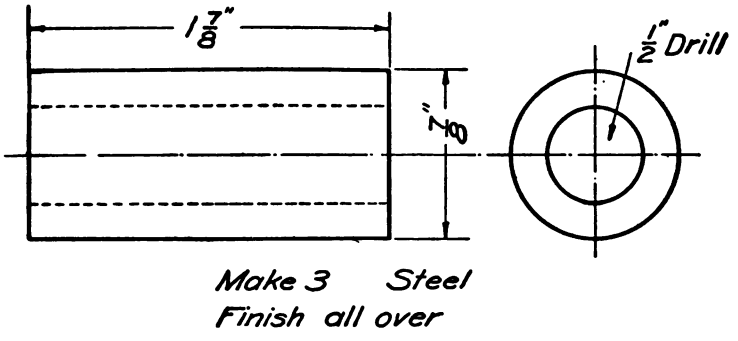

FIG. 69.

preferably in section. When this is done the abbreviation *Dia.*, is placed after all diameter dimensions unless covered by some other note such as *Drill*, *Bore*, etc.

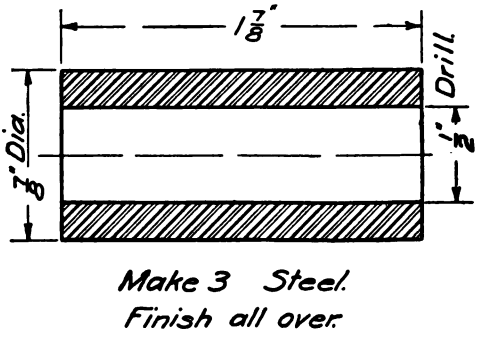

FIG. 70.

Shafts, Etc., of Changing Diameter. Fig. 71 is a drawing of a steel stud. The points to be especially noted are the way the diameters are shown, also the fact that the longitudinal dimensions are put on to form a continuous line the entire length of the piece with an over-all outside them. The over-all must, of course, be equal to the sum of all the others. These might be considered the principal dimensions. Then if there were

lesser details such as the location of spottings, etc., those would be given on another line between the principal dimensions and the drawing itself. (Notice the $\frac{1}{32}$" for rounding the end.) The describing of the thread will be referred to under its proper heading.

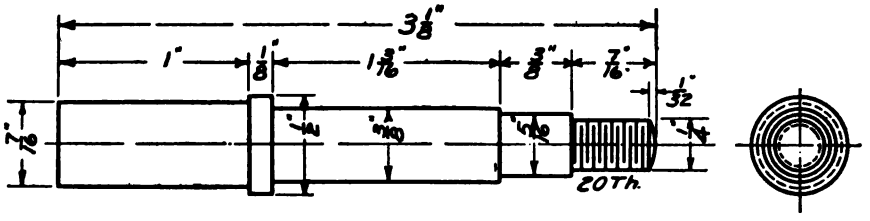

FIG. 71.

Radii of Curves and Fillets. If a round corner or curve of any sort is designed to be of definite radius, the radius is given and the center located if its position is not clear from other conditions. If the curve is

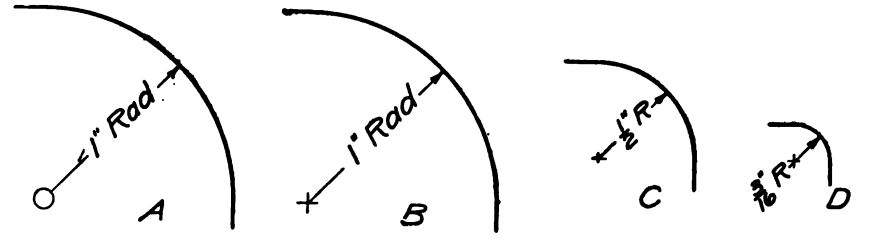

FIG. 72.

of small radius and unimportant, it is usually shown but not dimensioned. In Fig. 72 are given common methods of stating the radii of curves; either *A* or *B* is used when there is room, *B* is preferable. *C* may be used when the space is too small to put in the three letters *Rad*. For a very small radius the method *D* is good.

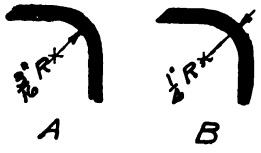

FIG. 73.

Figure 73 shows the usual way of dimensioning radii on boiler plate, etc. *A* gives the inside radius and *B* the outside radius of the bend.

In all of the above cases the position of the center is evident from the fact that the arcs are tangent to the straight lines.

Additional examples of radii and location of centers occur in Figs. 122, 123 and 124.

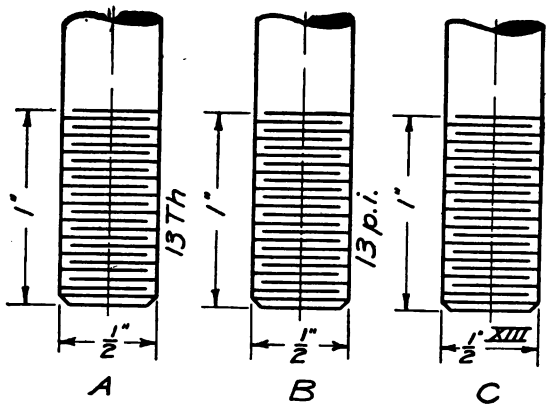

FIG. 74.

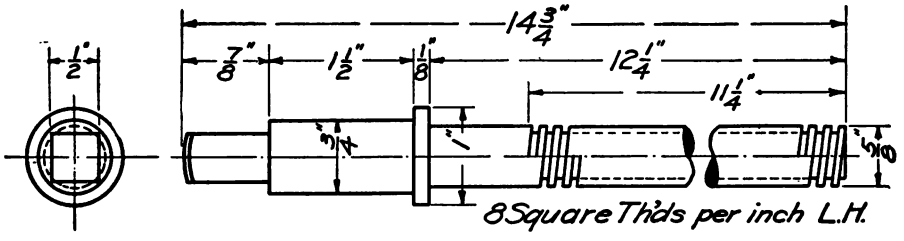

Make 1 Steel
Finish all over.

FIG. 75.

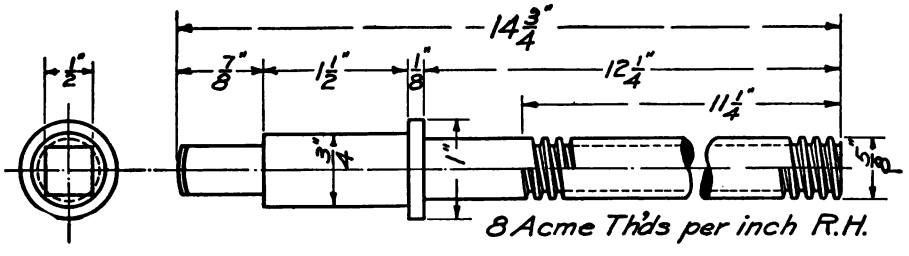

Make 1 Steel
Finish all over

FIG. 76.

Screws. Fig. 74 shows three common ways of dimensioning and describing an ordinary V-thread; Figs. 75 and 76 are drawings of screws having square and acme threads respectively.

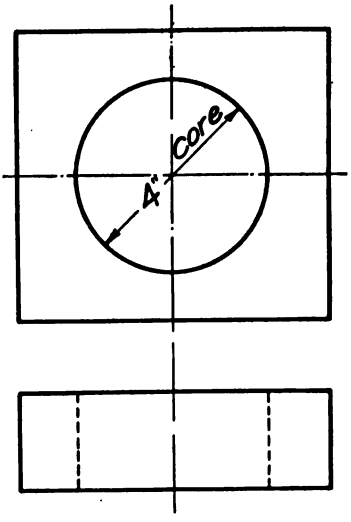

FIG. 77.

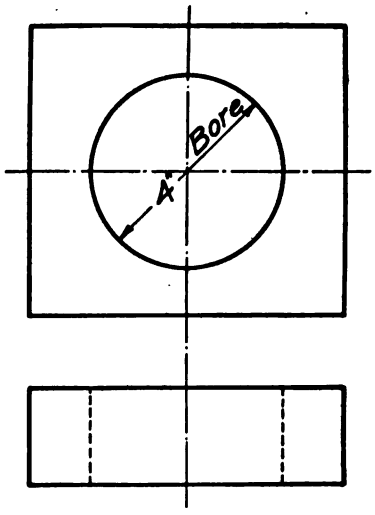

FIG. 78.

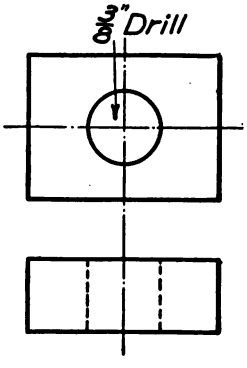

FIG. 79.

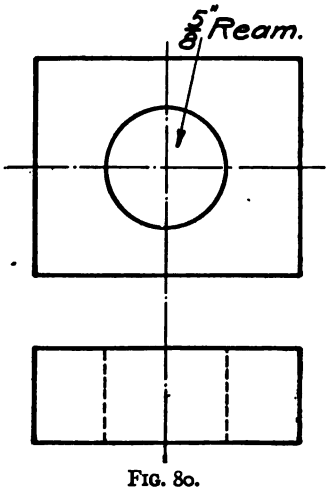

FIG. 80.

Cylindrical Holes. Two elements enter into the dimensioning of holes. First the description of the hole, whether it is cored, cored and bored, drilled, reamed, countersunk, counterbored, tapped, and the like; second, the location of the hole or series of holes.

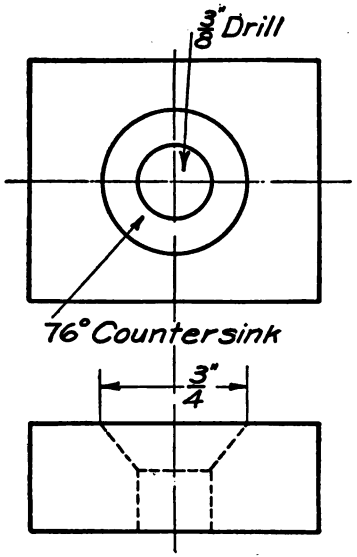

FIG. 81.

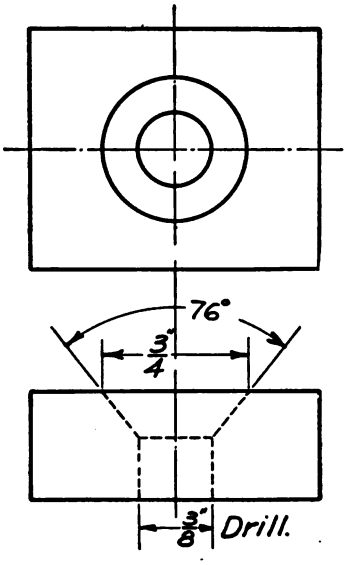

FIG. 82.

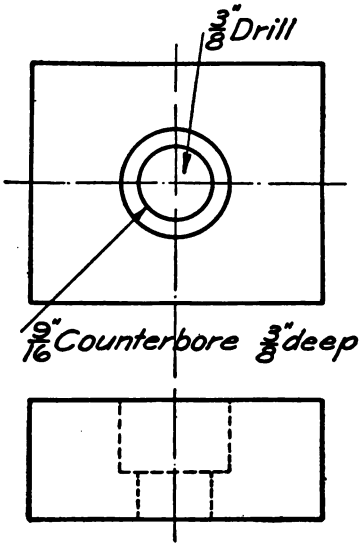

FIG. 83.

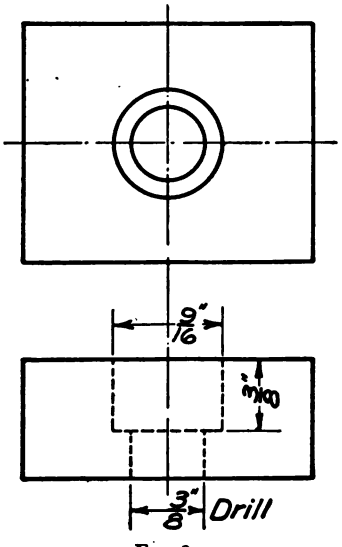

FIG. 84.

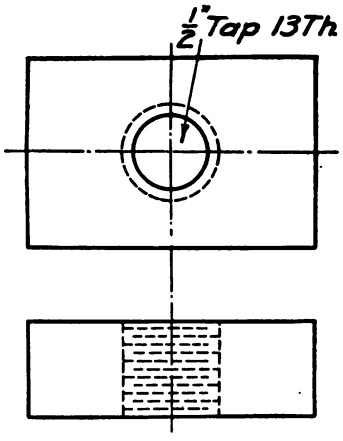

FIG. 85.

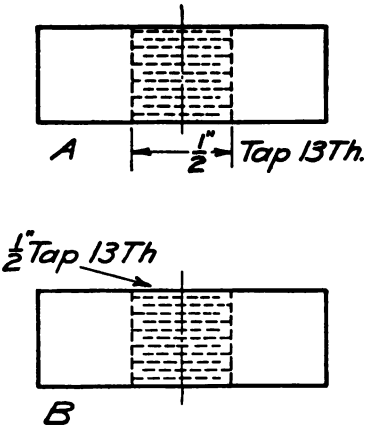

FIG. 86.

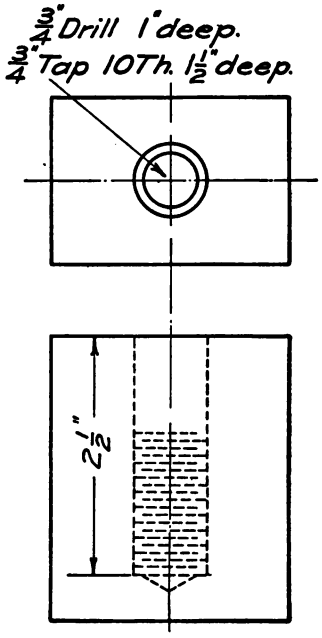

FIG. 87.

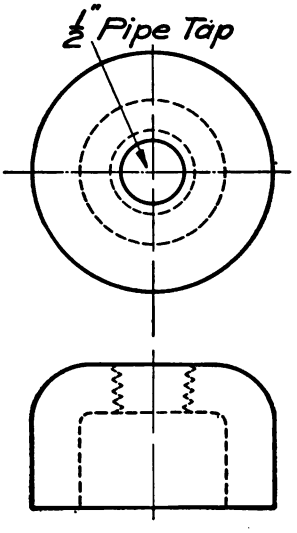

FIG. 88.

Describing Holes. The description of a hole or set of holes is accomplished partly by the manner of representation and partly by notes. The variation in the practice of different drafting rooms in this feature

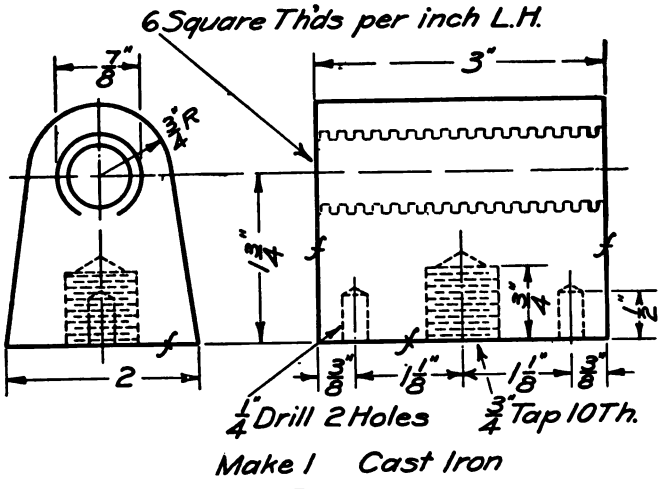

FIG. 89.

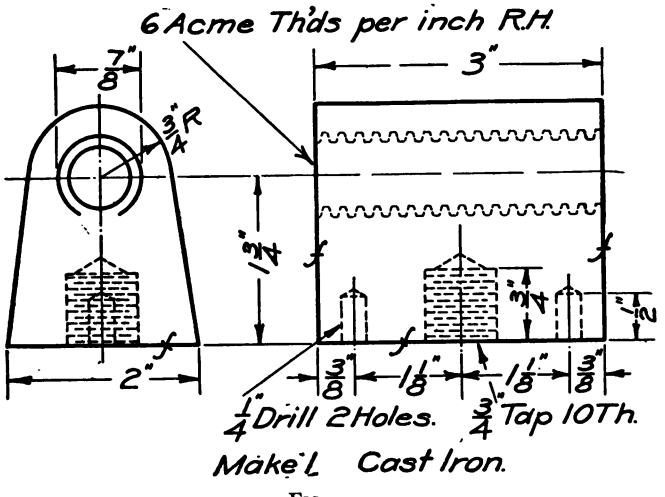

FIG. 90.

is very great. In some places the hole, whether large or small, is simply shown and marked whether finished or not. In other places the drawing indicates all the operations involved in getting the hole into its final condition. Still others give the final operation only.

Figures 77 to 90, inclusive, give methods in common use for describing the various kinds of holes. Fig. 77 is a cored hole, Fig. 78 a bored hole, Fig. 79 a plain drilled hole, Fig. 80 a hole reamed to size, Figs. 81 and 82 two ways of describing a countersunk hole, and Figs. 83 and 84 two ways of describing a counterbored hole. In Fig. 85 a hole tapped with a V-thread is shown in two views. Here the note describing the hole is referred by means of the pointer to the view where the hole shows as a circle. Fig. 86 gives two different ways of describing the same hole where only the side view of the hole appears. Fig. 87 shows a safe method for dimensioning a hole which is plain part of its length and tapped the balance.

The usual way of describing a hole tapped for a standard pipe is illustrated in Fig. 88. It should be noted that the hole here shown is tapped for a standard $\frac{1}{2}''$ iron size pipe, the actual size of the threaded hole being such that the threaded end of a $\frac{1}{2}''$ pipe would screw into it. Figs. 89 and 90 are intended particularly to illustrate the method of describing holes threaded with square and acme threads respectively, but these two figures are completely dimensioned working drawings and happen to still further illustrate drilled holes and holes tapped with V-threads.

Locating Holes. The question of location is the same whatever kind of hole is involved. The first rule and one to which there is practically no exception is: Locate a hole by dimensioning the position of its centre. When possible these dimensions are given from finished surfaces or from the centres of other holes, in such a way as to be most conveniently used by the workman and insure his working with the necessary accuracy. The draftsman, therefore, as in most other cases, needs to know on what sort of machine the holes are likely to be made or finished. With this knowledge he can give the dimensions best suited for use on that machine. For example, suppose the holes A, B and C, Fig. 91, are likely to be bored out on a machine the work table of which has vertical and horizontal adjustments that can be accurately made. The piece containing the holes would be fastened to the table with the finished surface MN resting on the table. Then the adjustment would be made so that the tool would be properly set for finishing the hole A. Having finished this hole, the work would be raised $4\frac{1}{2}''$ and moved over $4''$ by means of the accurate adjustments of the machine and the tool would be properly set for finishing the hole B. Next a rise of $2''$ and horizontal adjustment of $7\frac{1}{2}''$ and the hole C could be finished. In this way the holes would be

exactly where they were designed to be and the dimensions given on the drawing would be just the ones which the machine operator would use in setting up his work.

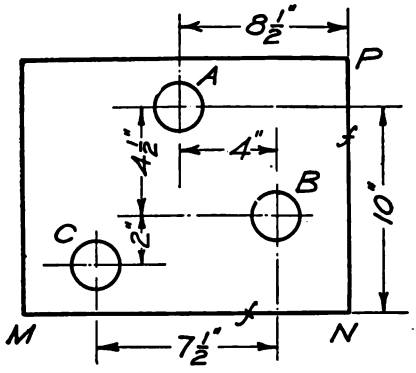

FIG. 91.

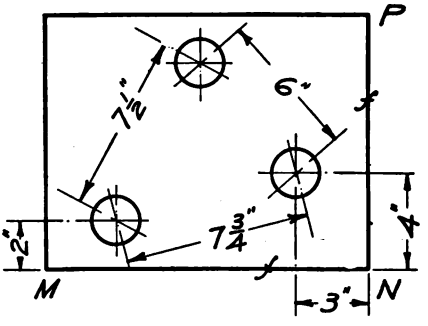

FIG. 92.

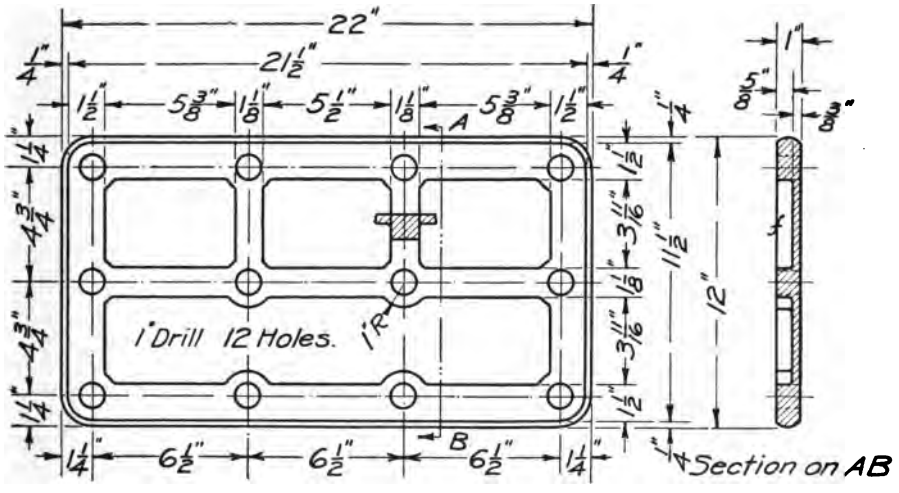

Make 1 Cast Iron.

FIG. 93.

Under other circumstances a different set of dimensions might be preferable as in Fig. 92.

Holes Symmetrically Located. Holes, such as bolt holes in covers, flanges, and many other places, are often placed symmetrically with respect to the center lines of the piece containing them. Fig. 93 is a

drawing of a valve chest cover and illustrates holes symmetrically located on a rectangular piece.

Figure 94 shows holes equally spaced around a circle. The circle

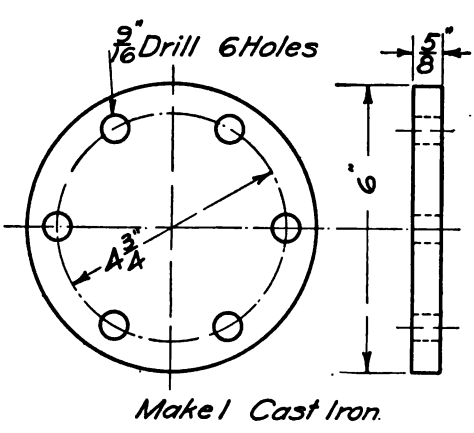

FIG. 94.

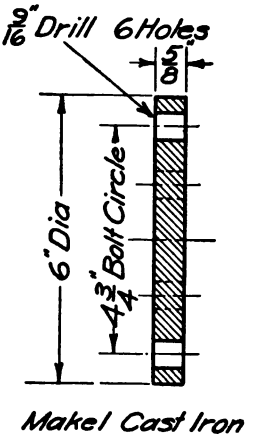

FIG. 95.

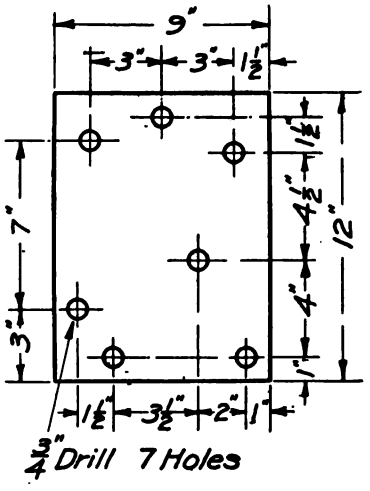

FIG. 96.

passing through the centre of the holes is called the bolt circle. Fig. 95 is the same piece shown by one view only.

Holes not Symmetrically Located. Fig. 96 shows holes in a rectangular plate not symmetrically located; Fig. 97 shows holes unequally

spaced on a bolt circle and Fig. 98 shows two kinds of holes on the same bolt circle.

Figure 99 gives two methods of locating holes on a piece having semi-circular ends. Further examples of locating holes appear in Figs. 121 to 124 inclusive.

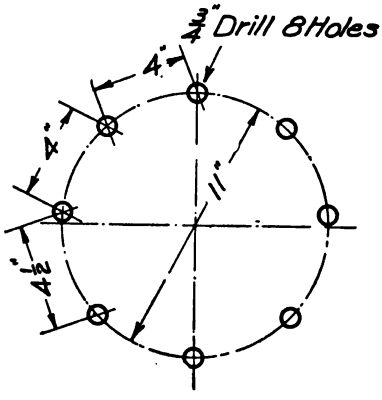

FIG. 97.

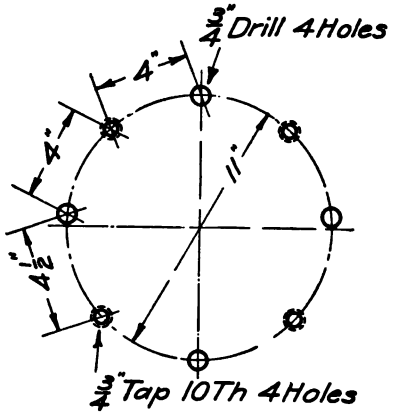

FIG. 98.

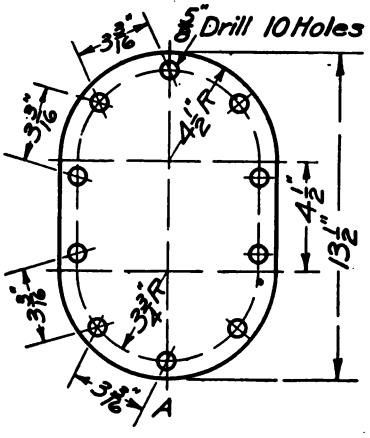

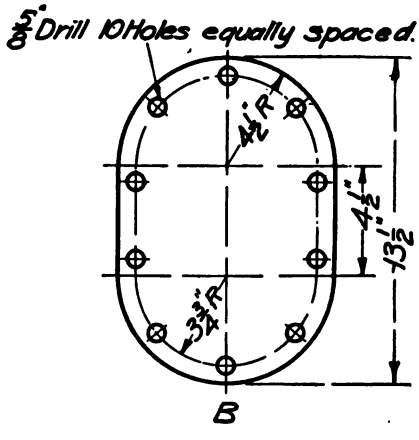

FIG. 99.

Bolts and Nuts. Fig. 100 indicates the dimensions ordinarily given on the drawing of a bolt and nut.

Tapers and Angles. Rules for dimensioning tapered pieces or surfaces making angles other than right angles with the principal axes or surfaces are subject to many exceptions. It might be said in a general way that

on conical pieces where the decrease in diameter per unit length is small the change in diameter per foot of length is ordinarily given on the drawing; or, if the size and rate of taper conform to any one of the standard tapers the name of the standard and the number of the taper are stated.

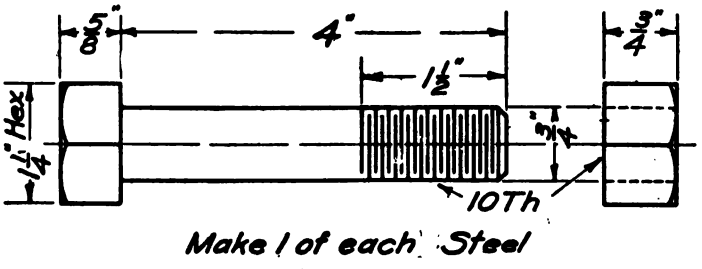

FIG. 100.

Figure 101 is a drawing of the end of a piston rod and well illustrates the method of dimensioning and describing a tapered part. It is to be noticed that the diameter at one end, in this case the large end, of the taper, the length of the tapered part, and the taper per foot are given. The note " Taper $3\frac{1}{2}''$ per foot " indicates that the diameter changes at

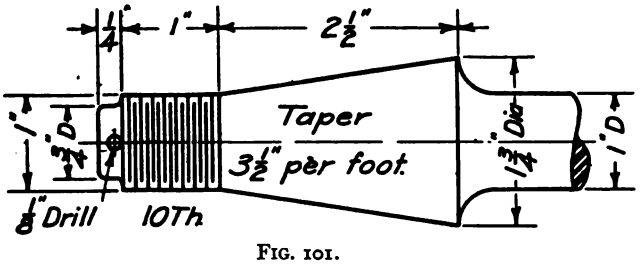

FIG. 101.

that rate so that the change in diameter for the given length of $2\frac{1}{2}''$ would be $\frac{2\frac{1}{2}}{12} \times 3\frac{1}{2}'' = 0.729$. Therefore, since the diameter at the large end is $1\frac{3}{4}''$ that at the small end is $1\frac{3}{4} - 0.729 = 1.021$, or a trifle larger than the thread which is $1''$ diameter. This smaller diameter might sometimes be given as well as the large one. If so it would be expressed in decimals.

Figure 102 shows a piece with standard taper specified by number and name.

A short frustum of a cone with rapid taper is often dimensioned by giving the angle which the element of the cone makes with its axis. See Fig. 103.

A plane surface making an angle with the other surfaces is also given

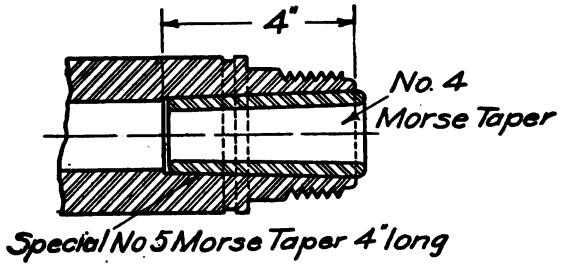

FIG. 102.

in degrees as shown in Fig. 104. When more convenient the tangent of the angle may be given as in Fig. 105.

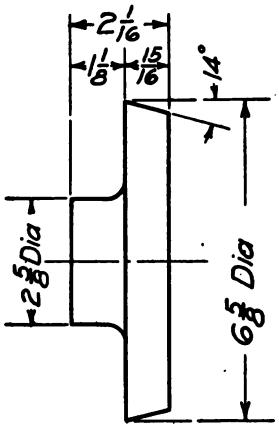

FIG. 103.

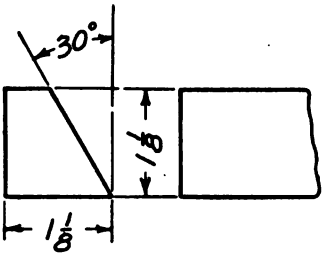

FIG. 104.

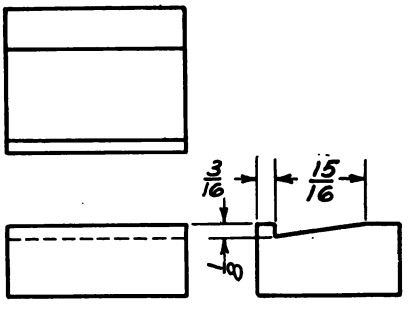

FIG. 105.

In giving an angle in degrees the abbreviation *Deg.* is sometimes used for degrees with the usual dots for minutes and seconds, thus 49 Deg. 15′ 45″. Sometimes the sign ° is used for degrees.

Holes for Taper Pins. Fig. 106 illustrates a method for dimensioning holes for taper pins.

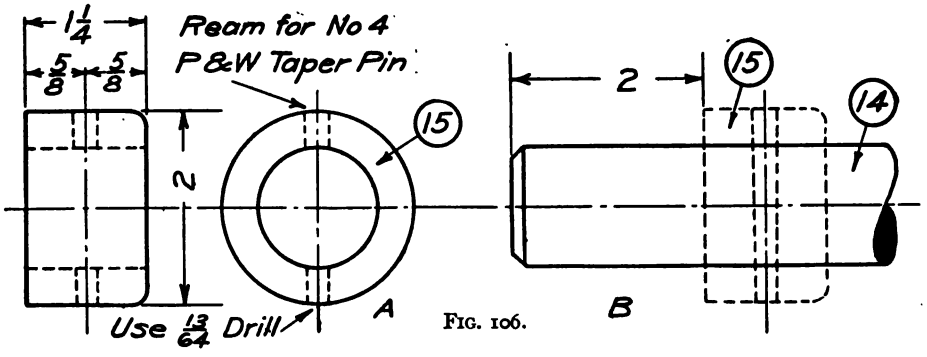

FIG. 106.

Pulleys and Gears. Figs. 107 to 112, inclusive, are drawings illustrating the manner of representing and dimensioning a pulley, spur gear with arms, rack, pair of bevel gears, worm and wheel and pair of "spiral" gears. An inspection of the drawings will make the various points clear without detailed discussion.

Dimensioning Fits. When one piece is to fit into another, as for instance a shaft into the hole in a pulley, a certain relation must exist between the diameter of the hole and that of the piece fitting into it. This relation depends upon the desired tightness of the fit, the diameter of the hole, and the nature of the material of which the parts are made. Roughly speaking, fits are either running fits or tight fits; that is the shaft is to be enough smaller than the hole in the pulley to allow the pulley to turn freely on the shaft, or the shaft is to be so large that it has to be forced or driven into the hole. This distinction is, of course, a very general one for the running fit may be a loose running fit or a close running fit; similarly the forcing or driving fit may require little or much pressure. For a running fit the hole is usually reamed or bored to a standard diameter and the part which fits into it is turned or ground a certain amount smaller. For a driving, forcing, or shrinking fit the piece which is to be forced in is made a certain amount larger than the hole. The allowance made in either case depends upon the size of the hole and the nature of the materials. Moreover, practice differs somewhat as to the amount to be allowed under any given conditions. Tables showing the allowances recommended for the various kinds of fits of different diameters can be found in many handbooks.

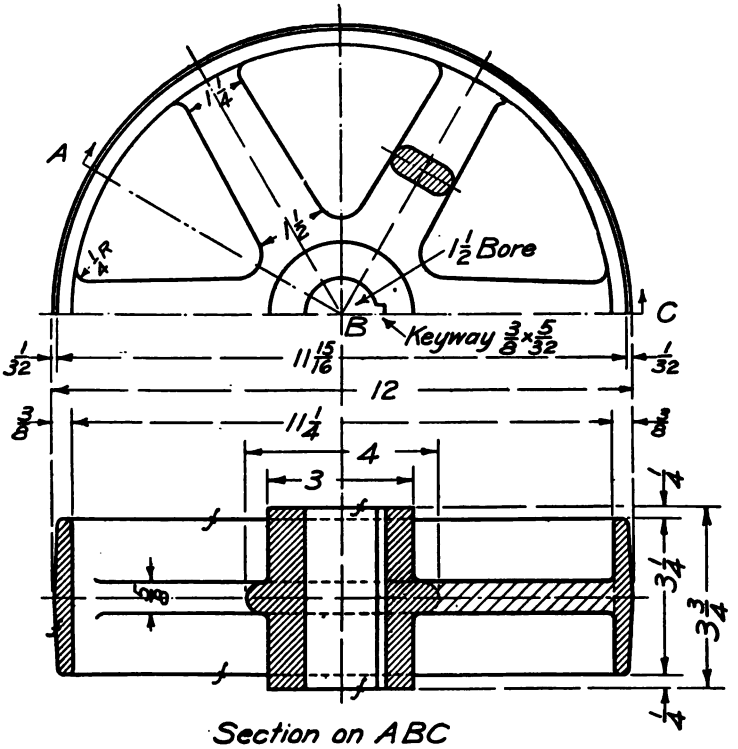

Section on ABC

Make 3 Cast Iron

FIG. 107.

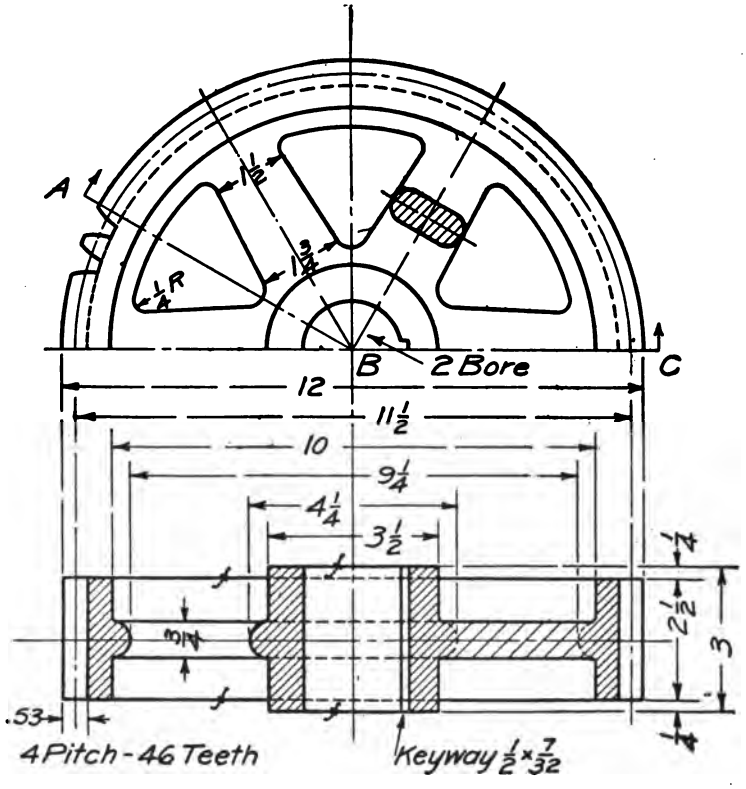

Section on ABC

Make 4 Cast Iron

FIG. 108.

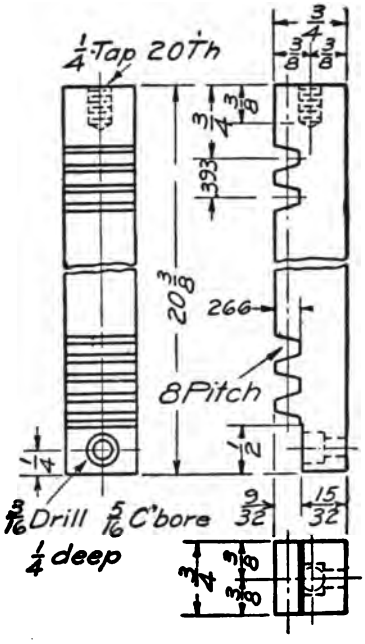

Make 2 Steel

Finish all over

FIG. 109.

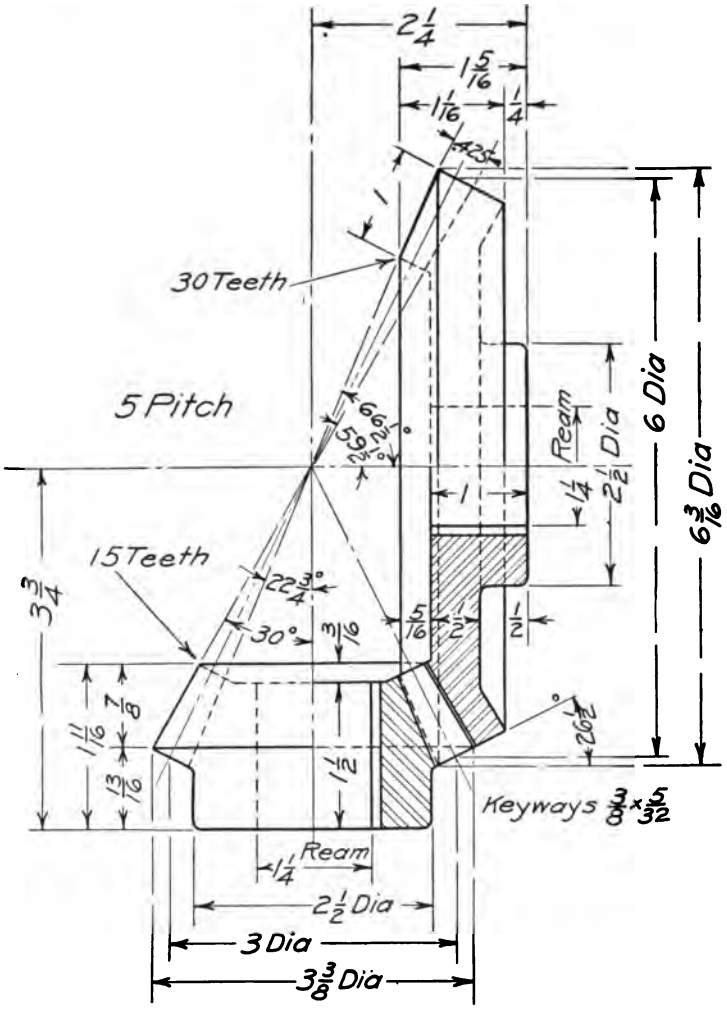

Make 1 of each Steel Casting

Finish all over

FIG. 110.

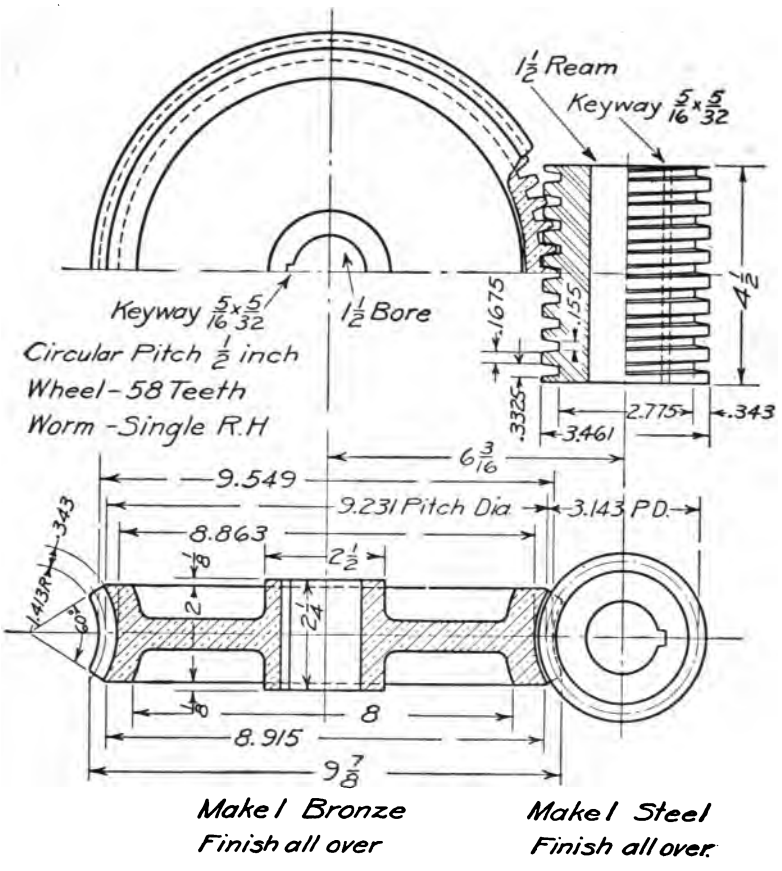
1½ Ream
Keyway 5/16 x 5/32
Keyway 5/16 x 5/32
1½ Bore
Circular Pitch ½ inch
Wheel - 58 Teeth
Worm - Single R.H
.1675
.155
4½
.3325
2.775
.343
3.461
6 3/16
9.549
9.231 Pitch Dia
3.143 P.D.
8.863
2½
.343
1.413R
60°
2
2¼
8
8.915
9 7/8
Make 1 Bronze
Finish all over
Make 1 Steel
Finish all over

FIG. 111.

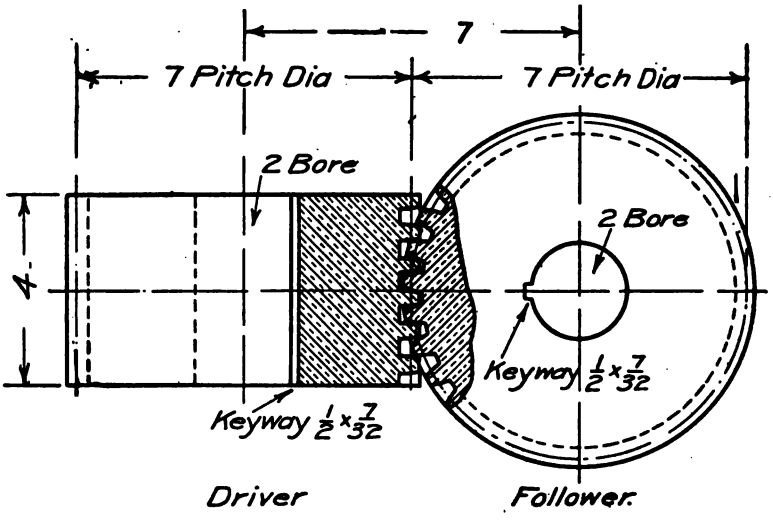

Make 1 of each Bronze

	Driver	Follower
Ratio	2	1
Angles	63°26'	26°34'
No. Teeth	19	38.
Normal Pitch	.5177	.5177
Cutter Used	#1-6P	#3-6P
Lead	10.996	43.979
Addendum	.1685	.1685
Outside Dia	7.337	7.337
Whole depth of tooth	.3630	.3630
Normal thickness tooth	.2589	.2589
5.932 Pitch		

FIG. 112.

We are not concerned here so much with the amount of allowance necessary as we are with the way in which the draftsman shall indicate the allowance on his drawing. Two methods are common. In the first one the draftsman merely gives the diameter and states the kind of fit, leaving the amount to be allowed to the knowledge and judgment of the workman. See Fig. 113, where *A* is a view of the hole and *B* a side view of the piece which is to fit the hole. In the second and safer method the draftsman takes the full responsibility and states exactly how much allowance the workman must try to make and not only that, but how much he may vary.

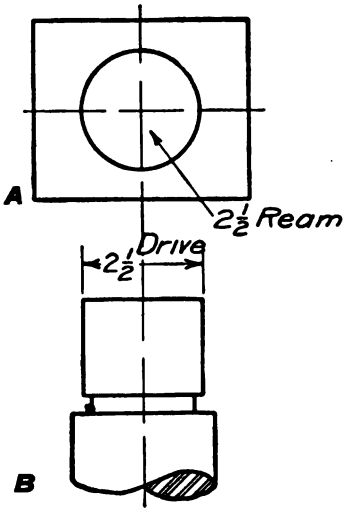

FIG. 113.

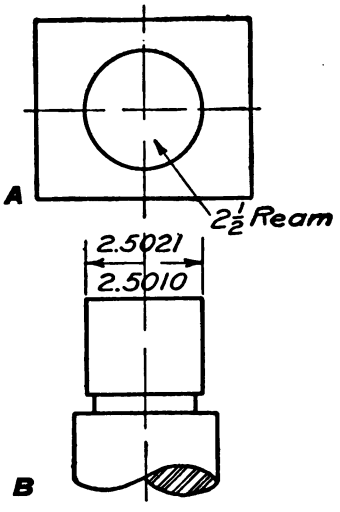

FIG. 114.

In Fig. 114 we have the same two pieces as in Fig. 113, but here the workman is told that if the hole is reamed to a standard diameter of $2\frac{1}{2}''$ and the other piece is turned or ground to any dimension between the limits 2.5021″ and 2.5010″ the fit will be satisfactory.

Allowable Variation. In many cases where a dimension is given it is not important that it be exact. Time may then be saved by indicating that fact on the drawing. If the dimension may vary somewhat, but not more than a definite amount, the limits are stated. The following examples will make this clear. 2″ ± means that the dimension is to be approximately 2″ but any reasonable variation either way is allowable. 2″− means the distance may be less than 2″ but must not be more. This is also written thus: " 2″ must not be more." 2″+ means it may

be more but must not be less, also written "2″ must not be less." $2'' \pm \frac{1}{8}''$ means the distance may vary anywhere from $1\frac{7}{8}$ to $2\frac{1}{8}$.

Over-all Dimensions. An over-all dimension is, as the word implies, a dimension between the extreme principal points or surfaces of the piece, often the summing up of a series of intermediate dimensions. A safe rule is to always give an over-all dimension if it can possibly be of any value either in constructing the piece or as a check on the other dimensions. Take for example the drawing, Fig. 75. The dimension $14\frac{3}{4}''$ serves first of all to give the workman an idea of how long a piece of steel is needed to make the rod and second to help avoid any error in the intermediate dimensions. In Fig. 124 the use of over-all dimensions on a casting is illustrated. The position of the over-all with relation to the other dimensions has already been referred to. (See " Shafts of Changing Diameter," page 25.)

Indicating Finish. Any piece or part of a piece of metal which is machined in any way so as to remove the whole or a part of the original scale is considered as finished. It may be filed, rough turned, planed, milled, ground, polished, etc. Whatever is to be done to it is indicated on the drawing. This is done in various ways, sometimes by conventional signs, sometimes by notes, and best of all by a judicious combination of notes and conventional signs. If the drawing is to be used only by men who are sure to understand the signs used, as, for example, in some special shop or office where the same signs are always understood to mean the same thing, then signs alone may be used. If, however, the drawing is for general use, as, for example, a drawing that is likely to be sent out, the draftsman knows not where, then the signs are accompanied by clear explanations or else supplemented or supplanted entirely by good clear notes.

Any attempt to illustrate the great variety of methods in use would be out of the question here and would not be of much value. We will, therefore, consider only one method, which is the basis of the practice followed by a number of representative drafting rooms.

Finish All Over. If a piece is finished all over, the nature of the piece being such that the ordinary workman would understand what kind of finish to give to parts not definitely specified, then a note, *Finish all over* near the principal view, is sufficient.

Finished Surfaces. Where certain surfaces only are finished, no specific instructions being necessary regarding the character of the finish, the fact is shown on the drawing by placing the character *f* on the view

or views where the finished surface appears as a line, taking care that the cross line of the *f* intersects its body at the point where the body intersects the line representing the surface. See Fig. 115. The *f* is placed on all views where the surface is seen as a line and reads always from the bottom of the sheet.

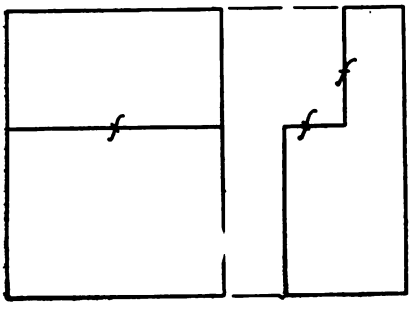

FIG. 115.

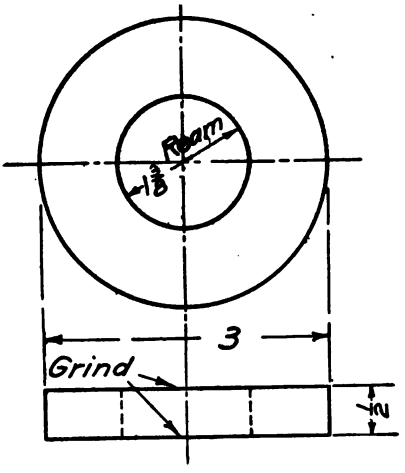

FIG. 116.

Special Finish. In case it is necessary to specify the kind of finish to be given to a surface this is done by a note near the line representing the surface with a pointer running from the note and touching the line as shown in Fig. 116. When this is done the *f* is usually omitted from the line although it is sometimes put on.

Finished Holes. As has already been shown when discussing the description of holes, the finish is provided for in the note describing the hole. For example, the note that a hole is $1\frac{1}{4}$" ream covers the question of finish and no further instructions are needed.

Spot Face and Counterbore to Surface. The instructions *Spot Face* or *Counterbore to Surface* are given when a spot on an otherwise unfinished surface is machined true to form a bearing surface for a nut, bolt head, shoulder of a stud, or something of the sort. This does not call for work to exact dimensions. There is not a rigid distinction between the two terms but the tendency is to say " Spot Face " when a slight amount is built out on the pattern at the spot so that when machined off the surface may be nearly flush with the unfinished part as in Fig. 117, while " Counterbore to Surface " is used where no allowance is made

on the pattern and the finished spot is slightly below the surrounding unfinished surface as shown in Fig. 118.

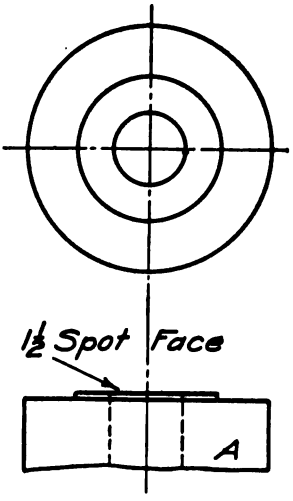

FIG. 117.

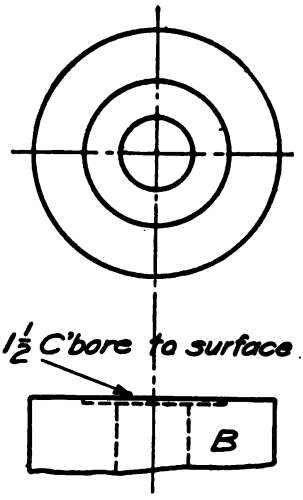

FIG. 118.

Material. The material of which a piece is made is practically always indicated by a note either on or near the principal view. If a piece is shown in section a certain style of crosshatching is often used for each material. This alone, however, is never considered sufficient to specify the material. Sometimes in the case of castings the material is stated only when it is other than cast iron.

Number Wanted. The number required per machine from each piece is sometimes stated in a note placed with the other general notes near the principal view. Some state the number only when more than one is required but the more general practice is to state the number in all cases. A not uncommon practice is to say nothing near the view itself about the number required but to give that along with other information in a " List of Parts."

Additional Examples. Figs. 119 to 124 are complete drawings of actual machine parts and are intended to further illustrate the application of the principals which have been discussed.

Standard Parts. There are many machine parts which are so often used that their proportions have become standardized. Standard parts may be divided into two classes: first, those which conform to some stan-

dard that is published and that machine users in general are familiar with; second, those which conform to a standard devised and used by some particular company. For example, a company building lathes may design a pattern for the legs and use that pattern on all their machines of a given type. That particular style and size of leg then becomes a standard part with them and receives a number or name by which it may be designated and which is always understood to refer only to that style and size. The same is true of screws, bolts, nuts, keys, pins, and a great many other pieces. Most of the generally accepted standards were originated by some firm manufacturing the parts either for its own use or for sale to the public. In some cases the " standard " is named for the party originating it, in other cases it is named for an organization formally adopting it or for a government adopting it in its departments.

In designing a machine or in making drawings of a machine already built, if parts occur whose dimensions conform to any accepted standard it is not customary to make drawings of such parts. Instead, they are designated by name or number or both, together with the name of the standard to which they belong, unless the latter is evident. A systematic method of specifying such pieces is adopted which of course varies in different drafting rooms. A good method seems to be to have a regular blank form of table for the purpose with spaces to be filled in giving all the necessary information about each piece, including information as to where the piece is to be used. This table may be included in the complete list of parts. (See " List of Parts " under Scale Drawings, Chapter V, where the subject is further discussed and illustrated.) Frequently also a note specifying the standard part is placed with the piece where it is to be used as well as in the general list, or it may even be drawn in there with a special kind of line.

Name and Part Number. While the matter of naming the pieces on the drawing, or giving them numbers, or both, in a sense belongs with the description of the parts, this can be more conveniently considered in connection with the scale drawings. It will be sufficient to say at this point that it is customary in well organized shops and drafting rooms to assign to each piece of a machine some mark or number under which it may be listed and by which it may be referred to. This mark is put on the drawing of the piece and frequently accompanies the name by which the piece is known. In a similar way the title of the sheet which contains the drawing of the piece or pieces bears a part in the description. See Chapter V for further discussion.

Use of Notes. It must have been observed that in all of the preceding illustrations frequent notes occur on the drawings. These are becoming more and more an important factor in machine drawing. Anything that will add to the completeness and clearness of a drawing is desirable and oftentimes a few brief notes will render clear and simple a drawing which would otherwise be extremely difficult to make or to read. It is safe then to say that notes are, and ought to be, freely used. On the other hand they must be concise and so placed that they do not confuse the outlines of the piece. For the most part they are placed outside the views with pointers extending to the places to which they refer.

Dimensions on General Drawings. For a discussion of dimensioning general drawings, such as assembly drawings, diagrams, etc., See Chapter VI.

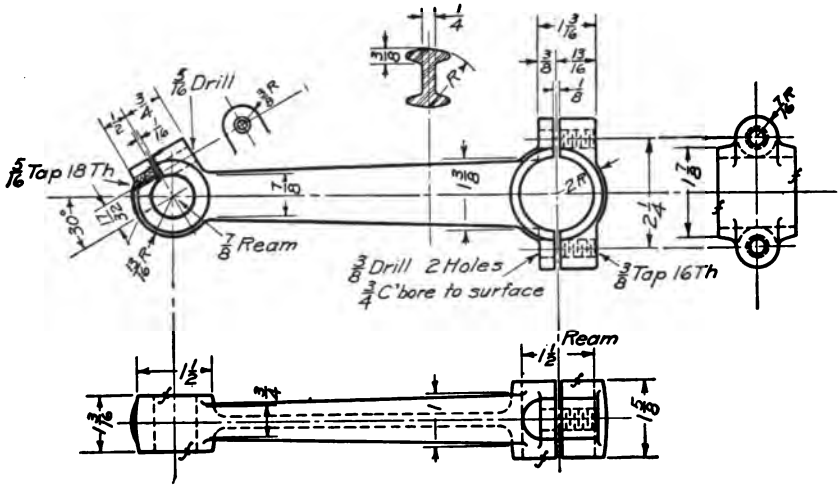

FIG. 119.

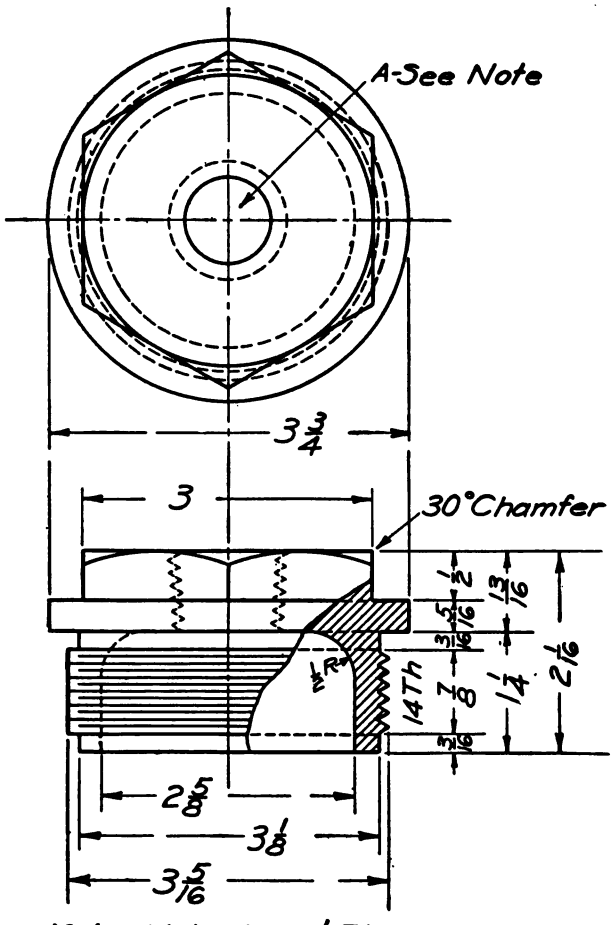

Note - Make 4-A = 1/2 Pipe Tap.
Make 4-A = 1/8 Pipe Tap.
Cast Iron Finish all over outside

FIG. 120.

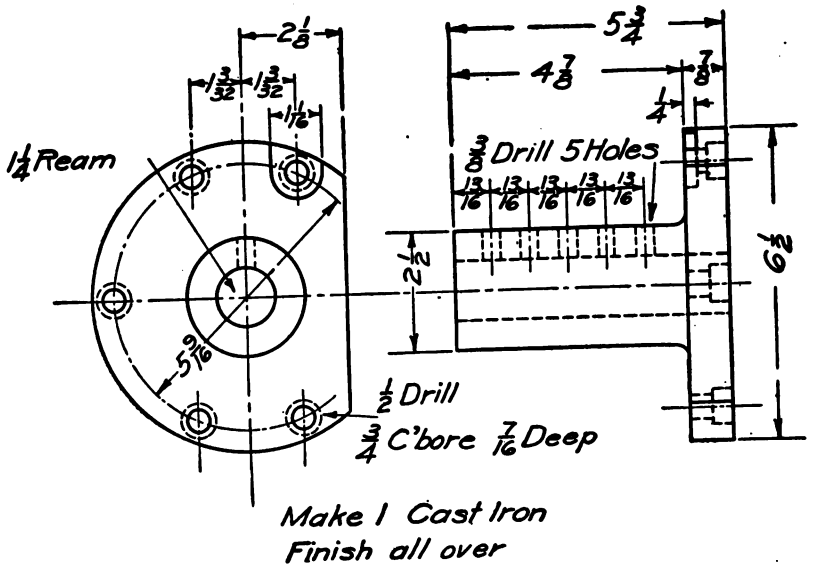

FIG. 121.

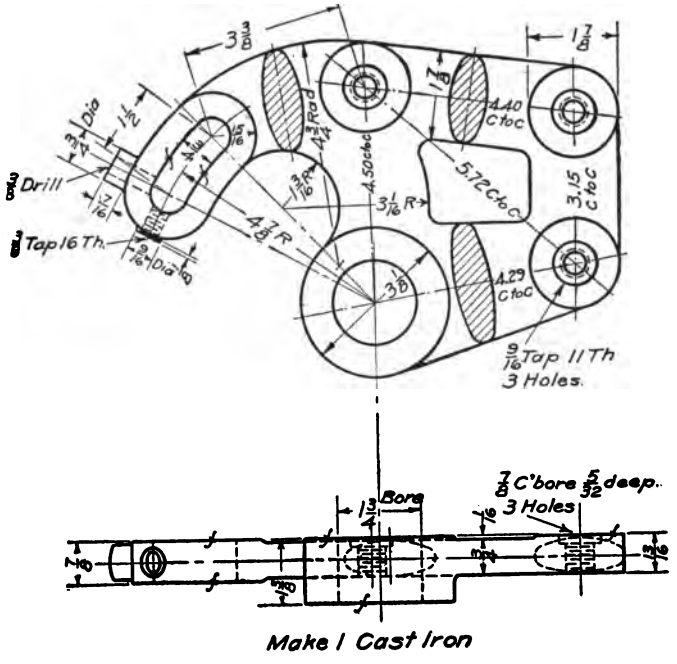

FIG. 122.

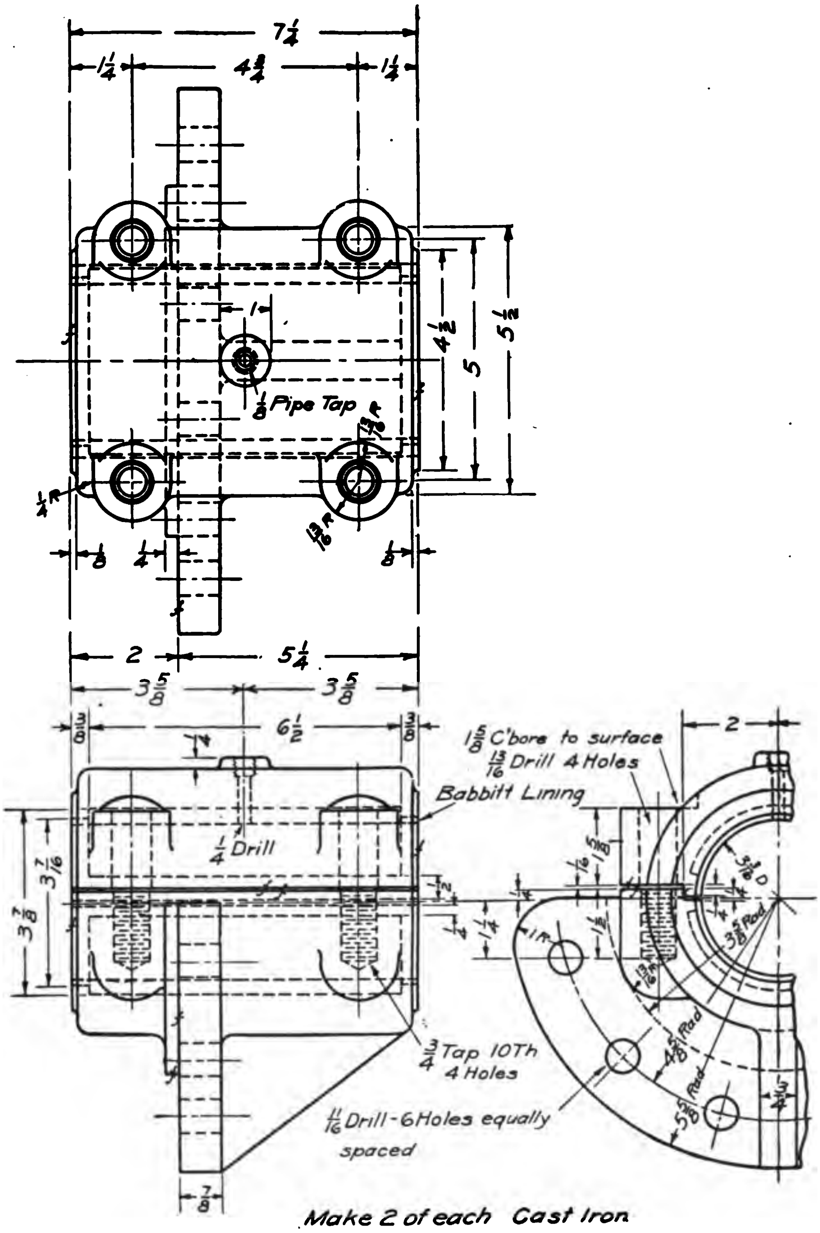

1⅝ C'bore to surface
13/16 Drill 4 Holes
Babbitt Lining
1/4 Drill
1/8 Pipe Tap
3/4 Tap 10Th
4 Holes
11/16 Drill-6 Holes equally spaced
Make 2 of each Cast Iron

FIG. 123.

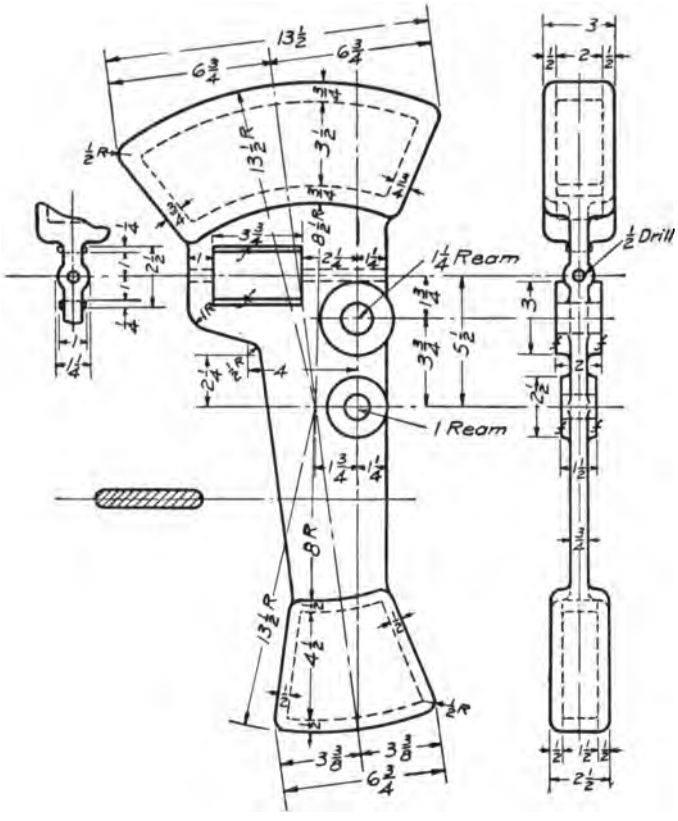

FIG. 124.

CHAPTER IV

SKETCHING

The term " sketch " is loosely used for a great variety of drawings from the artist's sketch to a more or less accurately made mechanical drawing. We must first of all then define just what we mean by the word as applied to our work in Machine Drawing. A " sketch " as we will use the word may be described as a drawing, either free-hand or instrumental, made as rapidly as possible for the purpose of imparting or recording certain information, or for the preliminary working out of an idea. In general, clearness and speed of execution are the first qualities sought.

A sketch of a machine or machine part may be perspective or some other pictorial view, such as isometric, oblique, etc., or it may be plain orthographic projection. The perspective, isometric, and the like have an important place particularly in describing peculiar mechanisms or pieces of odd shapes. This is especially true when the description is being made for the use of persons unfamiliar with the principles of ordinary projections. Every engineer ought to be able to make quickly such a sketch which would be good enough to serve its purpose. In the present chapter, however, we are to confine ourselves for the most part to sketches made in orthographic projection.

It would be hard to overstate the importance to the engineer and especially the engineer who has to do with machinery, of the ability to make and read sketches. The finished drawing, accurate and complete, is a necessity for permanent use especially in the case of complicated pieces. The production of such a drawing, however, involves much time and necessitates drawing board, instruments, a convenient place to work, and all of those things. Suppose a man must take a description of a certain machine. It may be far away from his drafting room, in a place where it would be impossible to make a careful drawing. Perhaps, furthermore, he has only a short time to do the work or his own time may be too valuable to spend on careful drawing. Here is where his ability to sketch is valuable. With a simple block of paper or whatever material may be available, a medium pencil,

perhaps a compass, he can soon make a sketch which will record all the necessary data in such shape that it can be readily understood.

Again, suppose a man wishes to explain a machine or an idea to some one else. He cannot take the time to make, or have made, a scale drawing. He must be able to sit down and express himself rapidly and clearly by means of free-hand sketches, using orthographic when he can but having recourse to perspective or isometric whenever they serve his purpose better.

In general the principles and methods which have already been ex-

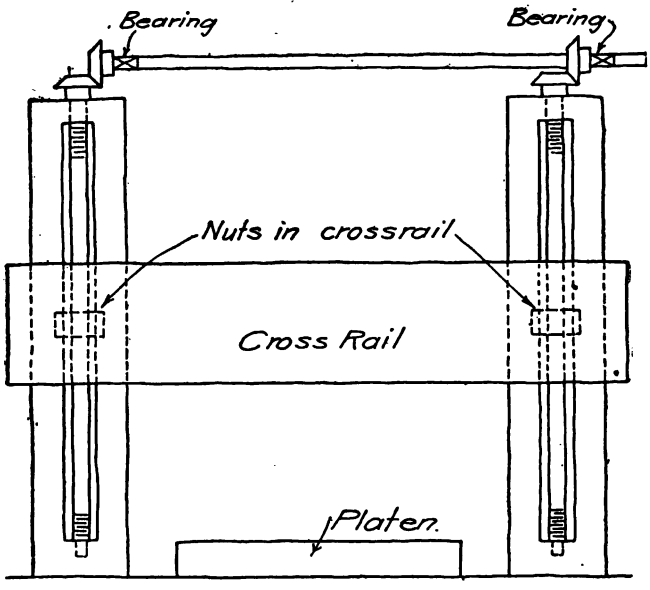

FIG. 125.

plained for machine drawing apply to orthographic sketches as much as to accurately made drawings. The main difference is in the matters of execution and scale. In the regular drawing the proportions are usually exact or at any rate bear certain relations to each other. In the sketch the proportions are judged by eye, with little or no measuring on the sketch itself.

The purpose for which a sketch is made of course determines its character and completeness. If it is merely to suggest an idea or the principle of some mechanism it may be very rough and not at all complete. In such a case it may be made up chiefly of center lines or full lines taking the place of center lines. Examples of sketches of this type

are shown in Figs. 125 and 126. Fig. 125 is the kind of a sketch which might be made to show how the cross rail of a planer is raised or lowered and still kept horizontal. Fig. 126 is a diagrammatic sketch such as might be made to show the elementary links of a Whitworth Quick Return Motion.

In both these figures no more detail is put in than is necessary to make the sketch show what was intended. On the other hand if the sketch is to be used in place of a regular drawing as instructions for making a machine part, or if it is to be a temporary description of the part and serve as data for making a regular drawing, then it needs to be complete, clear and reliable. Fig. 127 shows such a sketch. It will be observed that this is a complete working drawing in every sense.

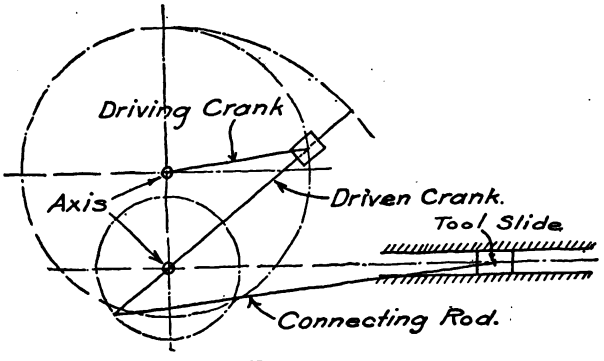

FIG. 126.

It is, however, free-hand, made rapidly on cross-section paper near enough to correct proportions to suggest the true appearance of the piece. The cross-section paper enables one to get approximate proportions without measuring. The lines, however, somewhat obscure the drawing.

Figs. 128 and 129 (Plates VI and VII) are additional examples of sketches. Fig. 128 is one sheet only of several sheets of sketches of an engine cylinder. Fig. 129 is a reproduction at a reduced scale of the sketch from which was made the scale drawing (Plate XIV) for one of the pieces of the universal chuck detailed and discussed in Chapter V. It must of course be understood that an actual sketch at such a small scale would be impracticable.

If one has the ability to make the latter kind of a sketch easily and quickly he can readily enough make the less complete sketches of the

other types. We will, therefore, consider that we have a machine part of which a sketch is to be made that will furnish a complete description of the part to be used either for duplicating the part or for making a finished drawing.

Method of Procedure. In making such a sketch a satisfactory order of procedure is as follows:

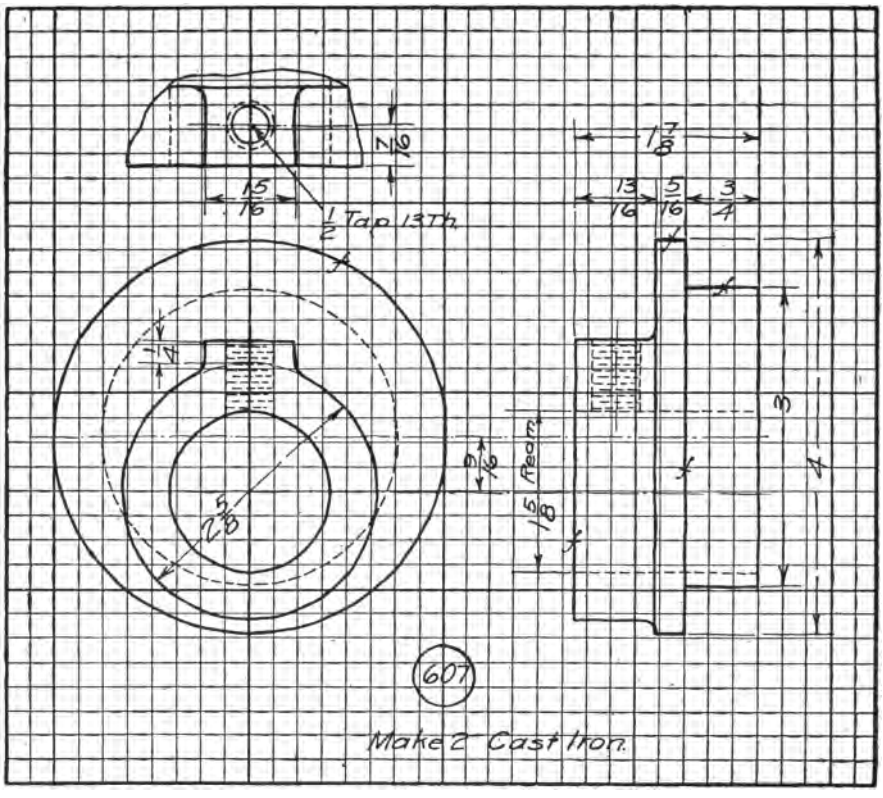

FIG. 127.

1st. Study the piece carefully, decide what views are needed to show it fully, then imagine how those views will look.

2nd. Draw the views. Start with main center lines and principal surfaces, filling in the larger details first and gradually working down to the smaller details. The proportions are judged by eye and are made as nearly right as convenient. Sketches are preferably fairly large and bold, allowing ample room for dimensions, notes, etc. This may necessi-

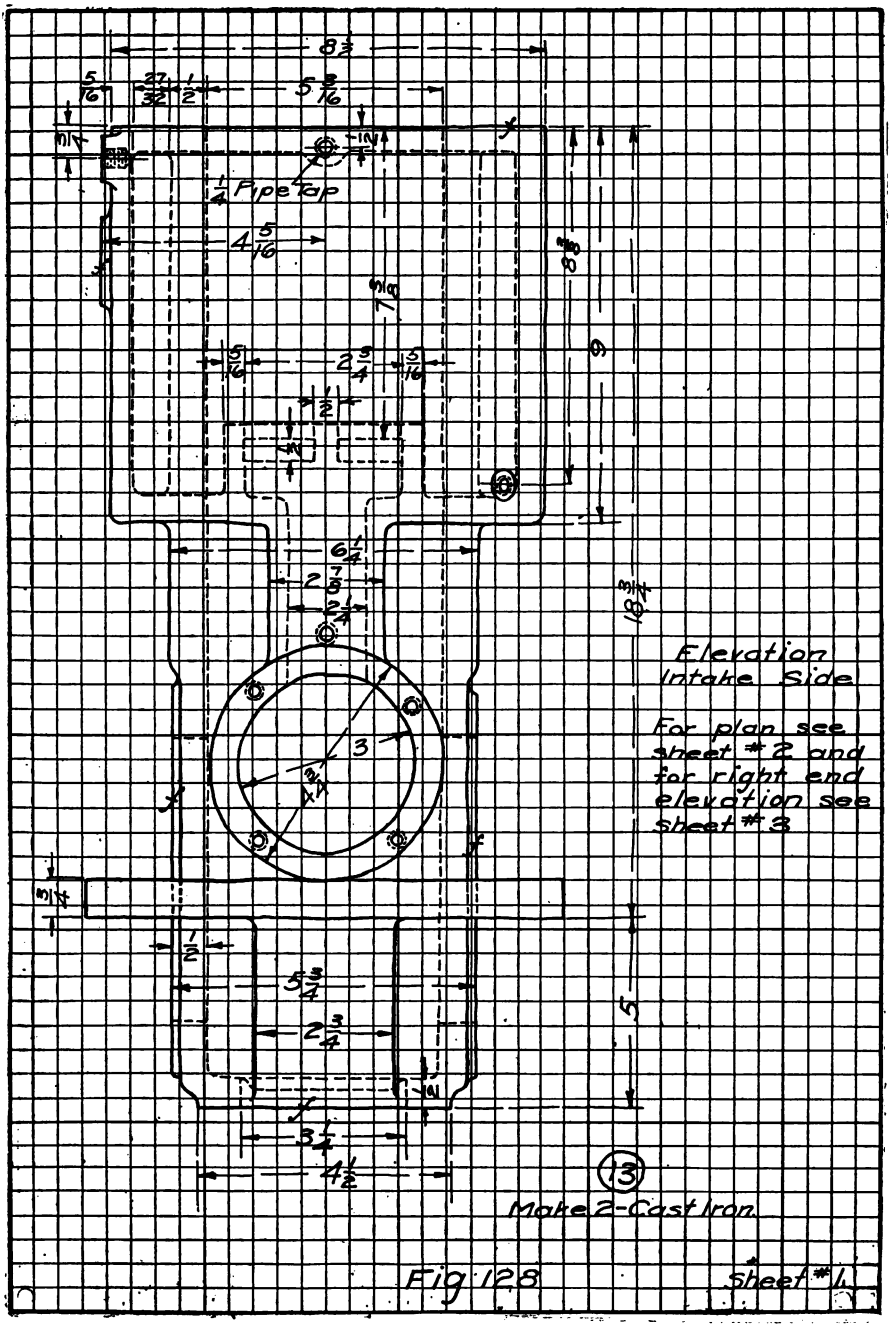
Elevation
Intake Side
For plan see sheet #2 and for right end elevation see sheet #3
Make 2-Cast Iron
Sheet #1

Fig 128

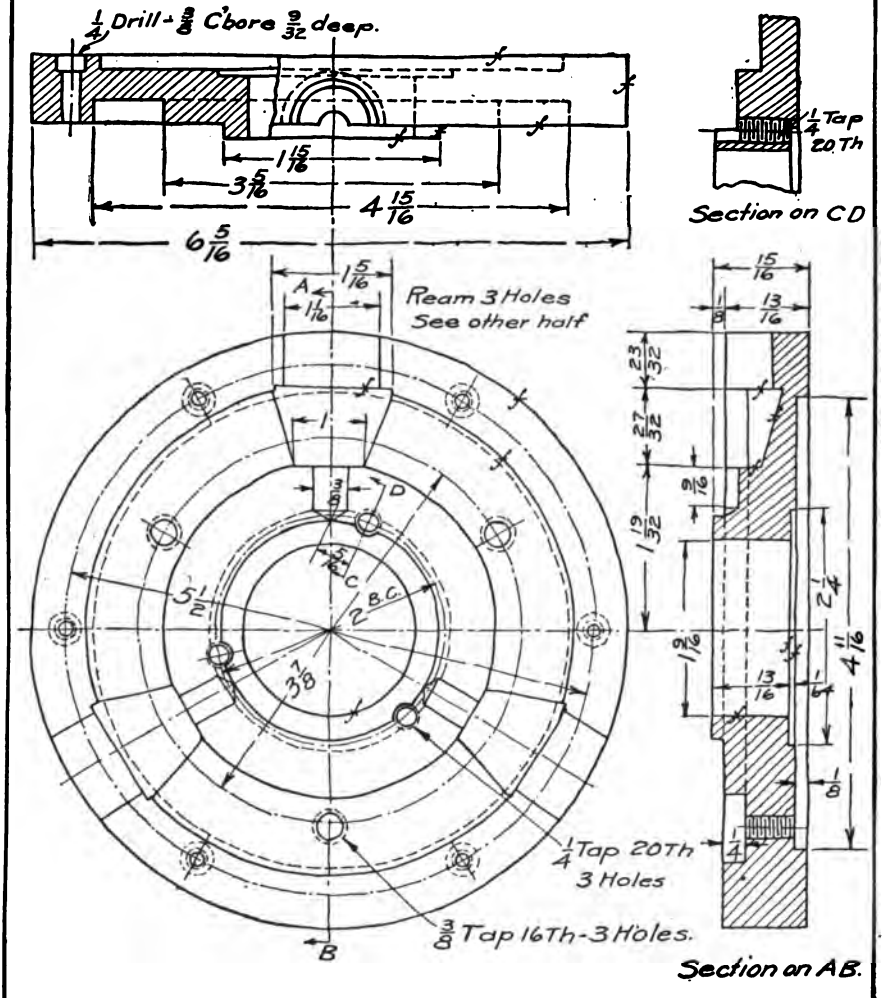

Make 1 Cast Iron.

Fig 129

tate separating the views, using a different piece of paper for each view or even breaking a view, putting part on one piece of paper and part on another. Proper marking of the views is very important when separated or broken. See Fig. 128.

3rd. Mark all finished surfaces and put on all dimension lines, extension lines, and arrowheads. It is better, as far as possible, to put on the sketch the actual dimensions that would be given on a finished drawing. It might, however, appear to be impossible or at least inconvenient to measure those dimensions directly on the piece, necessitating taking certain other dimensions from which the desired ones could be calculated. In that case both the measured and the calculated dimensions would be recorded on the sketch. If the desired dimensions can be obtained from the measured ones only by a careful graphical construction, then, of course, only the measured ones can be recorded when sketching. It is well, nevertheless, to put in the dimension lines for the desired figures.

4th. Take and record all measurements, at the same time putting in all explanatory notes.

CHAPTER V

THE SCALE DETAIL DRAWING

The regular detail drawing for permanent use is the complete detail drawing accurately made, with proportions correct, and finished up in such a manner that copies can be easily and cheaply made without injury to the original. When the term " detail drawing " is used, it is ordinarily understood to refer to the drawing as above described. There are two stages in the production of such a drawing: first, the preliminary drawing ordinarily spoken of as the pencil drawing; second, the final drawing almost always in ink, made either by inking over the lines on the pencil drawing, if that is made on suitable material, or by covering the pencil drawing with tracing cloth and tracing the lines in ink. Sometimes when the drawing is for temporary use, the pencil drawing is used as the final drawing and blue prints are made from it. For convenience we will refer to the preliminary drawing as the pencil drawing and the final as the ink drawing. Since it is the ink drawing from which copies are taken for shop or other uses, and the pencil drawing is only a stage in the making of the ink drawing, our discussion will naturally apply to the final drawing unless the pencil drawing is specifically mentioned.

Drafting Room Systems. We have already referred to the fact that each drafting room adopts its own system in the matter of methods of representing, dimensioning, conventional signs, and the like. In addition to this some system is essential in the matter of size of sheets on which the drawings are made, position and content of titles, numbering, filing, etc. A systematic method for making and recording alterations of the drawing is also of vital importance.

It would hardly be profitable for us here to describe in detail any one of the systems in use. A general discussion of some of the things to be considered in devising a system and a few illustrations will better fulfil our purpose.

Sheet Size. It is convenient and perhaps even necessary to have, in any given drafting room, some uniformity in the size of the sheets on which drawings are made. Since sometimes large drawings have

to be made and sometimes only very small ones, it is of course desirable that the draftsman have some latitude in selection of his sheet. Accordingly it is customary to adopt a series of standard sizes of sheets and allow the draftsman to choose in any particular instance the one of those standard sheets which best accommodates the drawing which he happens to be making. He must, however, choose some one of the standard sizes. The factors which determine what the standard sizes shall be are many. The sizes must, of course, be such as are best adapted to the kind of drawings ordinarily produced; the use made of the drawing must be considered; the different sizes should bear such a relation to each other as to utilize space economically in a filing cabinet. Fig. 130 (Plate VIII) shows a series of five sizes based on the $8\frac{1}{2}'' \times 11''$ sheet as a unit. That is, every sheet is some multiple of the $8\frac{1}{2}'' \times 11''$ sheet. It will be noticed that the short dimension of No. 2 is the long dimension of No. 1 while the long dimension of No. 2 is twice the short dimension of No. 1. A similar relation exists between No. 3 and No. 2 and No. 4 and No. 3. No. 5, while still a multiple of No. 1, departs from the above relation. A similar relation of the various sizes is employed in many drafting rooms; in others there seems to be no definite relation, the various sizes apparently being selected without regard to each other.

Border Lines. Ordinarily a border line is drawn near the edge of the sheet allowing a narrow margin, say $\frac{1}{2}''$ to $1''$, between the trimming edge and the space in which the drawing is done. This, of course, is not an essential part of the sheet layout, but it insures keeping all lines and figures a certain distance from the edge where they would be liable to injury in handling the drawing. The general appearance of the drawing is also improved.

Titles. Every sheet bears a title. For any given standard sheet the title would always be in the same place and the space occupied by it would always be of the same dimensions. The size and location might differ, however, for different sizes of sheets. Here, again, the matter of convenience in filing and using the drawing is the principal determining factor. Any statement as to what ordinarily does, or should, go into the title must be very general as there seems to be very little uniformity among the different drafting rooms.

The following items with the comments made in connection with them will serve to give an idea of common practice in this matter of what the title contains: 1, — Name of Machine; 2, — Kind of Drawing, whether " General " or " Detail," Pattern-makers, Shop, etc. Item 2

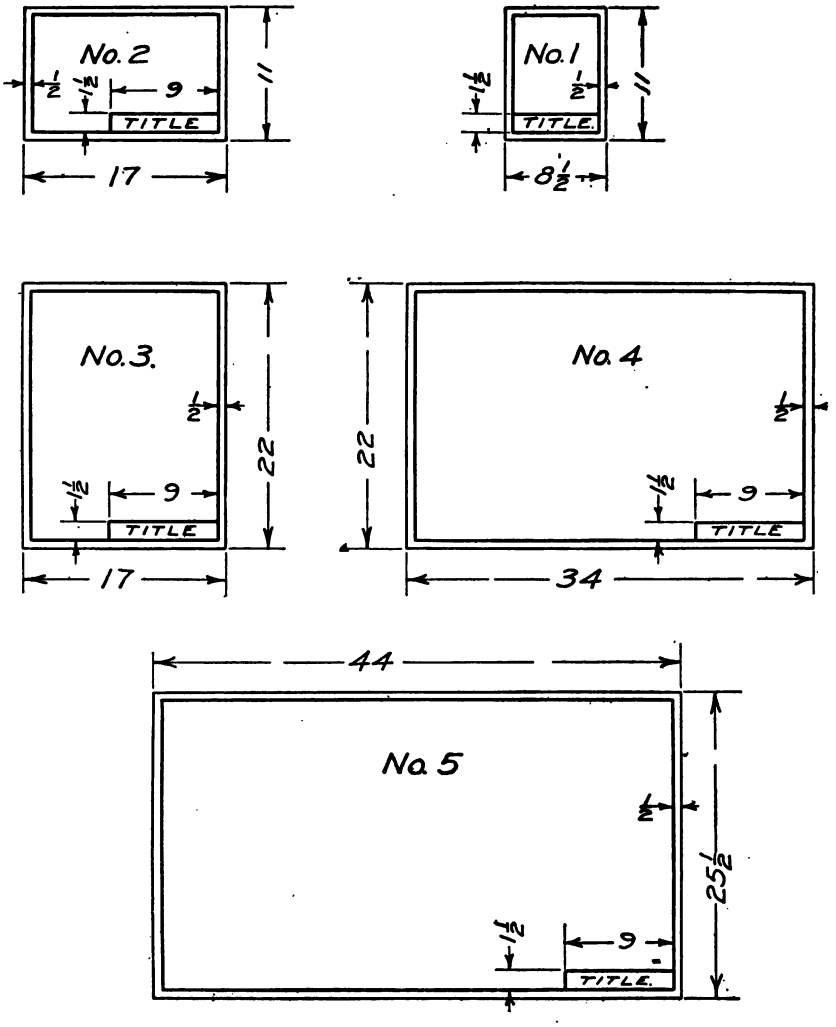

A SET OF STANDARD SHEETS

Fig 130

is sometimes given, but frequently omitted. 3, — If the sheet contains a detail of one piece of the machine the name of the piece is often stated. If the sheet contains details of some or all of the pieces composing a certain part of the machine, the name of the part may be given. 4, — The name of the firm making the drawing is almost always included and sometimes the name of the parties for whom the machine is to be built. 5, — The date and draftsman's signature, with perhaps the signature of the officials who approve the drawing, are embodied.

In addition to the above items there are frequently given certain data such as job number, etc. Another item, sometimes contained in the title and sometimes in a note outside the title space, is a list of " Reference Drawings," that is, a list giving the numbers of other drawings of the machine to which reference might be necessary when using the drawing in question.

Grouping of Pieces on Sheet. The various ways of grouping the drawings of different pieces on the sheets may be roughly classified as follows :

1. Draw on the same sheets parts which fit together, regardless of material and method of manufacture, putting as many pieces on a sheet as can conveniently be done.

2. Draw on the same sheets parts which are made of the same material or which are similar in method of manufacture. With this system, each large piece would probably be on a sheet by itself. As many small pieces as convenient would be drawn on the same sheet provided they were similar pieces and belonged to the same general part of the whole machine. For example, suppose detail drawings are being made of the parts composing the carriage of a lathe. The saddle casting would be drawn on a sheet by itself, as would the apron casting. All the smaller cast parts would be grouped on one or more sheets, several on the same sheet. The gears would be grouped in like manner, using as many sheets as necessary. The remaining parts, which would be chiefly turned steel, such as short shafts, studs, special screws, etc., would be grouped.

3. The third method is to draw only one piece on a sheet, using the larger sizes of sheet for the larger pieces and the smaller sizes for the small pieces. This system is of advantage where the same piece is used in different machines. For instance, suppose a certain shop manufactures engine lathes. There would be many parts which would be common to several styles of lathe. The drafting room might find it

convenient to have each piece drawn on a sheet by itself, and the drawing filed in such a way that it could be readily found without reference to any machine.

Assembled Details. It frequently happens that a piece can be more intelligently constructed if the drawing shows it in its proper position relative to the pieces with which it fits. In such cases the drawing may be what is sometimes called a dimensioned assembly. It would not

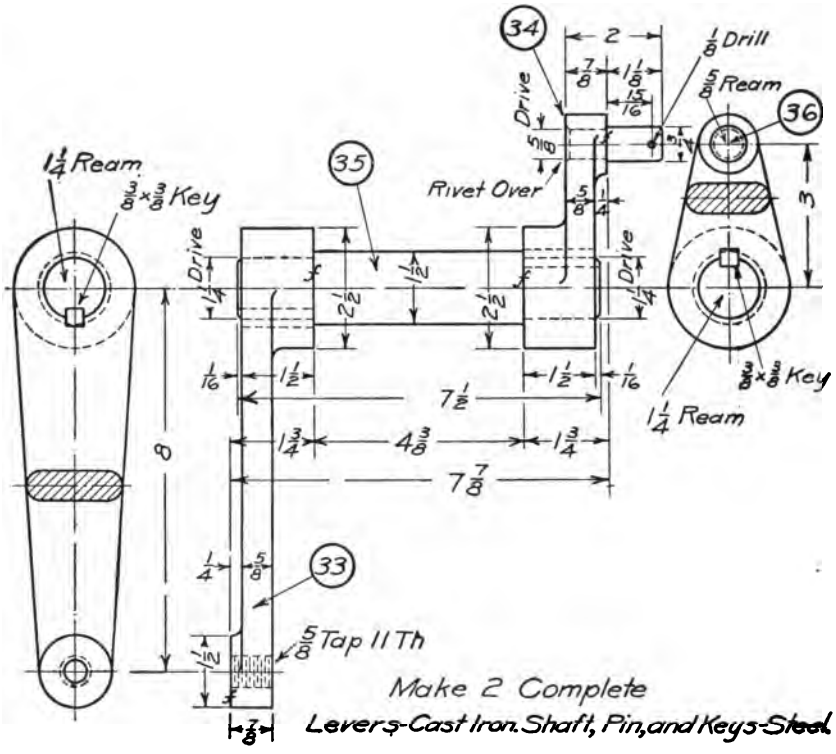

FIG. 131.

be an assembly of the whole machine but a drawing of some group of parts in their proper relative positions with the necessary number of views so that the exact form of each piece may be understood and all dimensions given. This is not a very common practice but there are some companies who follow this custom in their drafting rooms. It is to be considered as a special kind of drawing, however, and is not to be recommended for ordinary use. There are cases where this seems to be a desirable way to show parts. For example, if several pieces are per-

manently attached to each other so as to form a unit and in reality act as one piece, being made separate merely for constructive reasons, they may well be drawn together. An example of this is shown in Fig. 131. There the two levers and shaft connecting them really form one rocker made in three separate pieces.

Arrangement of Views. It is well to adopt some standard arrangement of views on the sheet. A common method is to place the principal elevation right side up, near the bottom of the sheet (unless a bottom view is needed), the plan above the principal elevation and the side elevations beside the principal elevation. In this way the side elevations will also be right side up and not lying down on their sides as they would be if placed beside the plan. Additional views, special sections, etc., may be placed where most convenient, marking them so that there can be no possible misunderstanding.

In this connection see the discussion with regard to relation of views in Chapter I.

Closely Related Pieces. Frequently it is very desirable for the workman to know not only the shape and dimensions of the particular piece

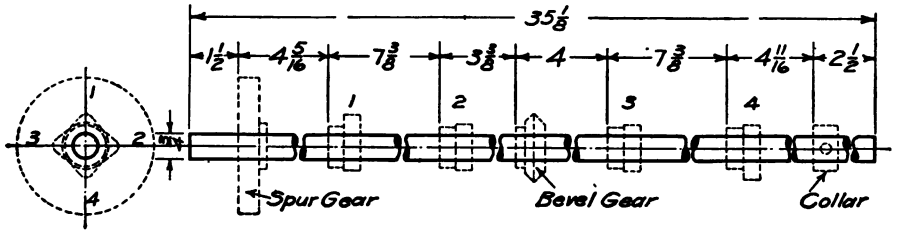

FIG. 132.

which he is making, but also its relation to certain other parts of the machine. This has been suggested above under Assembled Details, but there are many cases where it is not desirable to make as complete a drawing as there described. For example, Fig. 132 is a drawing of a cam shaft for a gas engine. The man making the shaft may need to know the position of the various pieces which go on that shaft as, for example, the cams and gears. It is not worth while to give him a complete drawing of the shaft with the cams and gears shown on it in detail. The information which he needs may be given by outlining, either in dotted lines or some special style of lines, the several pieces. These would be put in in fine lines or with red ink so that they would show but

dimly on a blue print, leaving the outline of the shaft itself standing out prominently.

It is not always necessary to even draw the attached pieces in outline. We shall describe later a method of identifying the pieces by giving to each piece a number called the Piece Number. When this is used it is possible to show which piece goes on a given place on the shaft by marking that portion of the shaft where the piece goes as finished for driving, sliding, running, or any other kind of fit for piece No. 3 say, 3 being the number of the piece which goes on there. This may be more clearly understood by referring to Figs. 133 and 134. Fig. 133 is a drawing of the end of a shaft which is to be forced into the piece of which one view is shown in Fig. 134. The piece number for piece, Fig. 134, is 27, and the note in Fig. 133, " 2-inch drive for 27," indicates that the 2-inch portion of that shaft is to have 27 driven on to it.

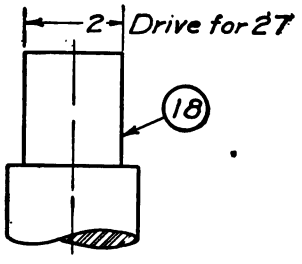

FIG. 133.

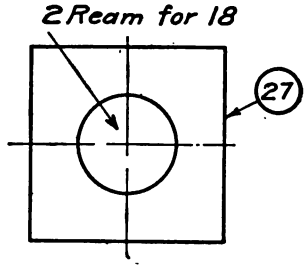

FIG. 134.

Another very satisfactory way of showing how a given piece is related to certain other parts of the machine is shown in Fig. 135. This is not radically different from some already suggested except that it shows the portion of the frame which supports the piece in question. This portion of the frame is sometimes merely outlined so as to show on the print in an inconspicuous way.

Piece Numbers and Filing Numbers. As we have already suggested it is common to give a distinguishing number to each piece in a machine. The system of numbering depends upon the nature of the machine and the conditions which have to be met in any given drawing room. The first essential is simplicity and clearness.

On Plates XIII to XVIII inclusive are the complete detail drawings of a universal chuck and on Plate XIX an assembly drawing, in three views, of the same chuck. Further mention will be made of these but mention is made of them here for the purpose of calling attention to the

piece numbers. It will be noticed that underneath the principal view of each piece is placed a number enclosed in a circle. This is the number for that piece. See, for example, sheet 2. In the title as part of the filing number for the drawing is the machine number 13 M 1. In reality,

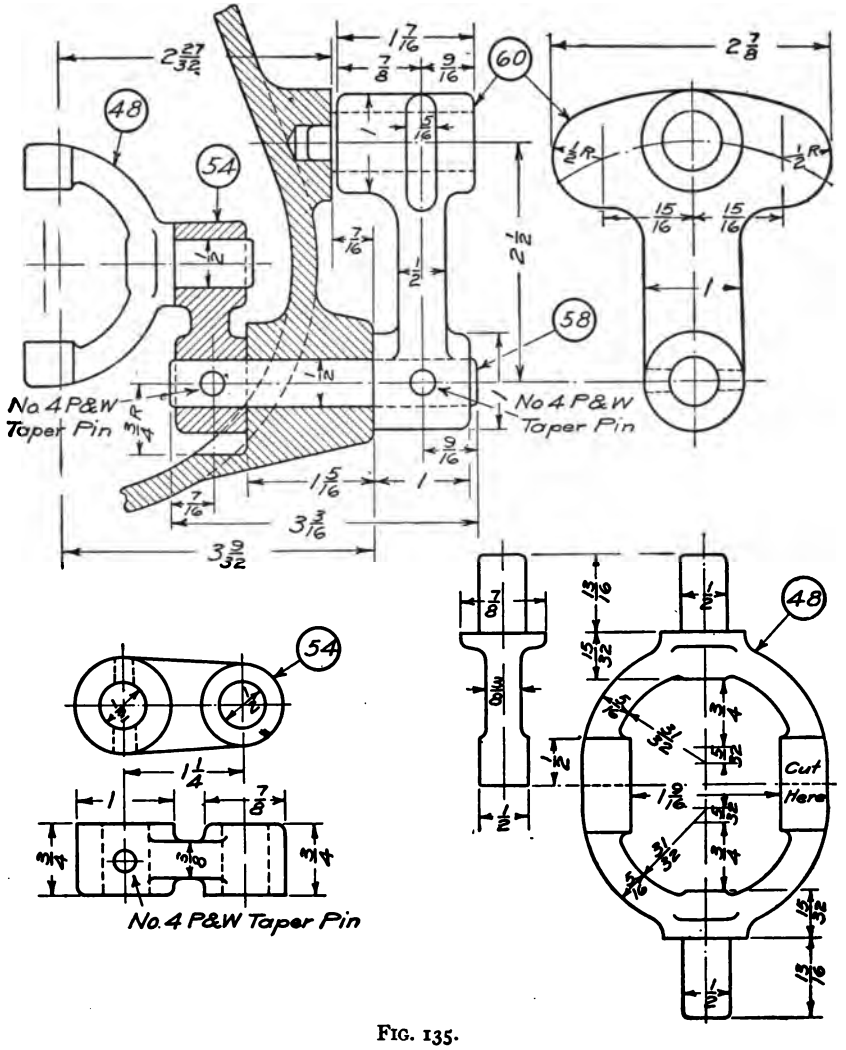

FIG. 135.

then, the number for the piece drawn on that sheet is piece No. 1 of machine 13 M 1 but since the machine number is given in the title it is only necessary to give the sub-number with the piece itself. Where it is the custom to draw only one piece on a sheet the piece number may

also be the filing number for the drawing. Whatever the system of piece numbering there must be some good system of filing, numbering, and cataloging the drawings so that the drawing of any piece can be quickly found, or the drawing identified from the piece.

Lists of Parts. It is convenient to have in connection with the set of drawings of any machine a list of all the parts composing the machine. This may be a complete list on one sheet of all the parts in the whole machine or there may be a list of the parts composing each group in the machine with the drawings of that group. Suppose, for example, that we are considering the drawings of a lathe. The head stock may be considered as one group and a part list made for the pieces in that group. The feed mechanism may be considered as another group and a second part list may cover that group, and so on throughout the machine.

Alterations. It is absolutely essential that there be some system of recording all alterations made on drawings or on the pieces themselves. No alteration should be allowed in the shop on a machine part without first having had a record made of it on the drawing of that part. Most drafting rooms have rigid rules regarding this matter. Some make the rule that under no circumstances shall a blue print for shop use be marked up, changed, or added to. All changes, additions, or eliminations must be permanently recorded on the drawing under proper sub-numbers, or new tracings made and new prints issued. If the alteration is made on an old tracing, a record is usually placed on the tracing and dated. If a new tracing is made the old tracing would be retained in the file and marked " Superseded " in some conspicuous place. The new tracing would bear a statement to the effect that it supersedes another tracing and give the number of the tracing which it supersedes. In some drafting rooms, the alterations on a tracing are made by erasing the changed parts, particularly dimensions, and inserting the new ones. In other drafting rooms the changed dimensions are not erased, but have one or two ink lines drawn through them. The new dimension has placed near or beside it a letter enclosed in a heavy circle. This letter is then put in a place on the drawing set aside for the purpose, dated and signed. The first change was lettered Z, the second change Y, etc. This system has the advantage of retaining on the drawing a complete record of all the changes made on the piece as well as the date of each change. Changes in the whole drawing are taken care of in a similar way.

Scales. Drawings must be kept of a size convenient to handle and it is therefore necessary to represent pieces smaller than actual size. The

ratio of a distance on the drawing to the actual measurement on a piece is called the scale of the drawing. Another perhaps more accurate definition of the scale is the distance which the draftsman uses to represent a distance of one foot. For example, if a casting is 6 feet long and the draftsman wants to represent it so that the length on his drawing shall be 18 inches, then we would say that the scale of the drawing is one-quarter size, or that the piece is drawn to a scale of 3 inches to the foot. In making a drawing at a reduced scale it is not necessary to calculate the distances which are to be measured out on the drawing. Draftsmens' " scales " or rules are for sale which are graduated for all the reduced scales ordinarily used. For example, the ordinary triangular boxwood scale has six edges in all and each one of these has one or more different graduations so that it is possible to read off directly the required dimensions for any of the scales commonly used.

There are two series of scales in use: one being 6″, 3″, $1\frac{1}{2}$″, $\frac{3}{4}$″, $\frac{3}{8}$″, $\frac{3}{16}$″, $\frac{3}{32}$″ to the foot; the other, 4″, 2″, 1″, $\frac{1}{2}$″, $\frac{1}{4}$″, $\frac{1}{8}$″ to the foot. Of these the 6″, 3″, $1\frac{1}{2}$″ are most common on machine drawings, the 4″, 2″, and 1″ are sometimes used, the others rarely. The $\frac{1}{4}$″ and $\frac{1}{8}$″ scales are very common for building plans.

Lettering. The appearance of a drawing is much affected by the quality of lettering done on it. The lettering should be plain, clear, neat, and business-like. All letters should be made free-hand, each line of a given letter being made with a single stroke of the pen except possibly in the case of some of the large letters and figures in titles and drawing numbers where the lines may be strengthened up by going over them a second time. Any attempt at mechanically constructed letters or fancy lettering of any kind is entirely out of place in machine drawing. Students and others frequently attempt to excuse their poor lettering by the remark that they never could letter well and it is useless to try. Such an excuse is childish. To be sure, the ability to make perfectly formed letters rapidly and without effort is not natural to every one, but anyone with ordinary intelligence and skill of hand can train himself without great effort to letter a drawing so that it will be plain and neat looking. No one but an expert should attempt to do any lettering without first drawing guide lines to regulate the height of the letters. These can be drawn very rapidly with T square or triangles. Then it is a simple matter to print the letters so that the general effect is satisfactory.

The kind of pen used for lettering depends upon the size of the letters.

LETTERS AND FIGURES

Large Caps: A B C D E F G H I J K L M
N O P Q R S T U V W X Y Z &

Small Caps: A B C D E F G H I J K L M N O P Q
R S T U V W X Y Z &

Lower Case: a b c d e f g h i j k l m n o p q r s
t u v w x y z

Whole Numbers: 1 2 3 4 5 6 7 8 9 0

Fractions: 1 2 3 4 5 6 7 8 9 0 $5\frac{3}{4}$

Large Caps: A B C D E F G H I J K L M
N O P Q R S T U V W X Y Z &

Small Caps: A B C D E F G H I J K L M N O P Q
R S T U V W X Y Z &

Lower Case: a b c d e f g h i j k l m n o p q r s
t u v w x y z.

Whole Numbers: 1 2 3 4 5 6 7 8 9 0

Fractions: 1 2 3 4 5 6 7 8 9 0 $5\frac{3}{4}$

Drawing Numbers: 13M2 14K1

For large capitals, such as would be used for titles, a fairly coarse ball pointed pen is desirable. For the smaller capitals a fine ball point may be used if preferred. For the lower case letters such as would be used for ordinary notes and for small dimensions a common pen, medium fine, with a good smooth point is best.

Plate IX shows several styles of letters and figures which fairly represent the kind and size of lettering used on machine drawings. The various drawings throughout the book illustrate the way these letters are applied although there the size may not be up to standard because of the reduction in reproducing. It will be noticed that both inclined and vertical letters are shown. The choice between the two is largely one of personal preference.

There are a number of books published which are devoted to the subject of lettering and which give specific instructions regarding the formation of the individual letters and figures.

Lines. Attention has already been called to the use of different kinds of lines for different purposes. Fig. 136 shows a standard set of lines

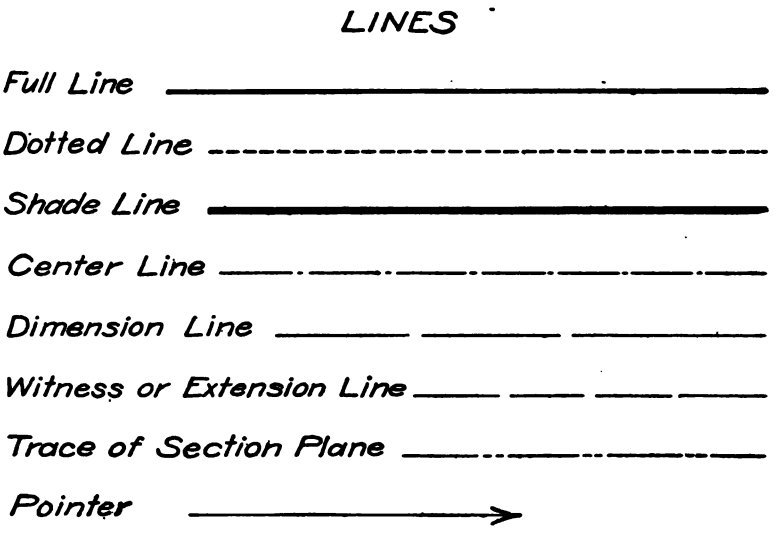

FIG. 136.

of about the weight desirable for ordinary drawings. Practice differs in the use of some of the lines while in the use of others it is quite general. Sometimes the center lines are made a dash and two dots, sometimes a continuous fine line. Extension lines and dimension lines are also frequently made continuous. There are arguments, of course, in favor

of all such variations, but the lines as shown in Fig. 136 seem to the authors, on the whole, most desirable for general use.

Shade Lines. Certain lines of the outline of a piece are sometimes drawn heavier than the others, such lines being known as shade lines. The supposition is that these shade lines cause the parts of the object to stand out more clearly and facilitate the reading of the drawing. While this may be true to a certain extent, yet the trouble involved is considerable and the majority of drafting rooms have discontinued the use of shade lines except in special cases.

The general theory underlying the use of shade lines is that a ray of light comes over the draftsman's left shoulder and lights the top, front, and left-hand faces of the object. The shade lines then are the lines which separate the light surfaces from the unlighted ones. With this theory as a basis the shade lines are put on in a conventional way, the rule being to shade those lines which represent lower or right-hand edges of material if these edges are sharp. The contour lines of cylinders, cones, and other rounded surfaces are not usually made shade lines although in some places they are. If the cylindrical or other surface is drawn in cross-section, however, the contour is shaded as the intersection of the cutting plane with the surface gives a sharp edge.

Each view is shaded as if it were an elevation, the light being assumed to come over the draftsman's left shoulder at such an angle that its projection on the drawing paper is in the direction of the arrow in Fig. 137, Plate X.

Figs. 137 to 143 are examples of the use of shade lines.

Line Shading. Very often a complicated drawing, particularly an assembly drawing, may be made much clearer by shading some of the rounded parts by means of parallel lines of varying weight and spacing to give the appearance of curvature. This is called " line shading." If this practice is followed to any great extent it will consume a great deal of time. A judicious use of line shading, however, is often very advantageous.

Figs. 144 to 150, Plate XI, show examples of line shading.

The Pencil Drawing. The pencil drawing is the temporary drawing from which the permanent drawing is to be made. It is, therefore, to be made with this end in mind. A good pencil drawing is one from which a good ink drawing or tracing can be easily made. In general, the pencil drawing should have everything on it that is to be on the ink drawing and should be so clear that one who knows nothing about the piece

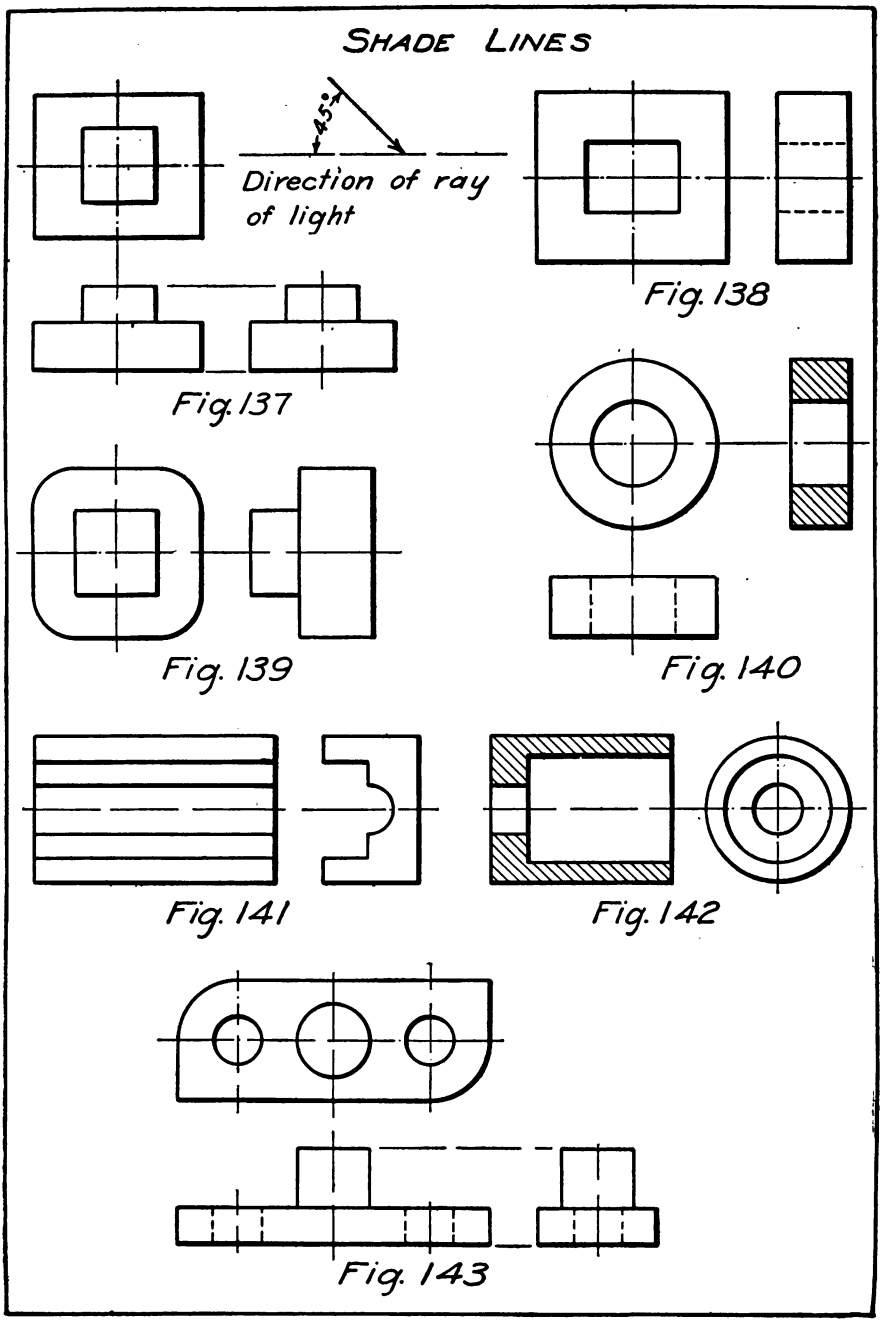
SHADE LINES
45°
Direction of ray of light
Fig. 138
Fig. 137
Fig. 139
Fig. 140
Fig. 141
Fig. 142
Fig. 143

LINE SHADING

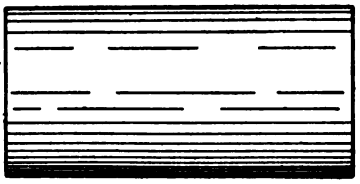

Fig 144

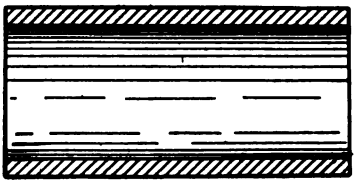

Fig 145

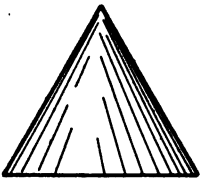

Fig 146

Fig 147

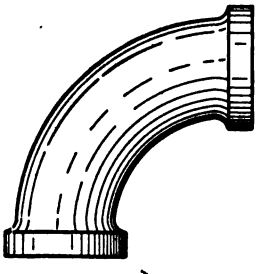

Fig 148

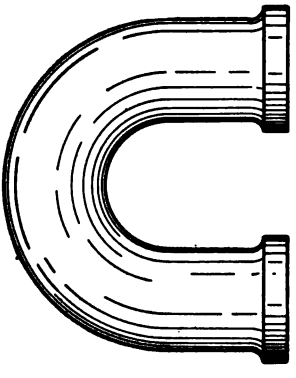

Fig 149

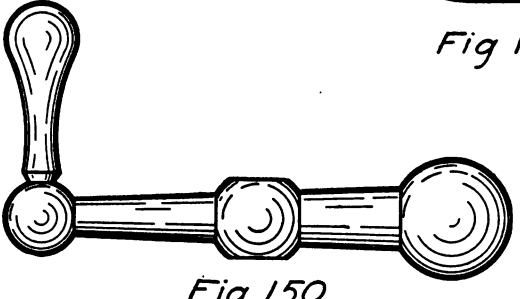

Fig 150

which is being drawn could make a correct ink drawing from it. Enough care and time should be put into making the pencil drawing to insure that this can be done, and no more. That is, the draftsman should not fuss over the pencil drawing and waste time trying to make a clean, pretty-looking drawing. On the other hand, if lines are to be dotted lines they should be shown as such on the finished pencil drawing; the point where every line stops should be perfectly well defined although the line itself may run past; dimension lines and dimensions should be put in where they are to be on the final drawing; guide lines should be drawn for all lettering and the lettering put in although this may be done rapidly.

Plate XII is a reproduction of the pencil drawing for Plate XVIII and shows the amount of care and degree of finish necessary for such a drawing.

The above practice should be followed closely by one who is learning to make drawings or by any one who is making a pencil drawing which some one else is to ink. An experienced draftsman, however, will make many exceptions if he is to do his own inking or if the inking is to be done by some one who thoroughly understands the work. He is likely to make any short cut which will reduce the total time on the drawing provided nothing is sacrificed on the quality of the final drawing. A satisfactory method of procedure in making a pencil drawing is as follows: —

1st. Decide what views are to be shown and how they are to be located on the drawing relatively to each other.

2nd. Select the scale to be used. In doing this it must be borne in mind that the piece must be drawn large enough to show all details clearly and to give plenty of room for putting in dimensions. On the other hand it must be drawn small enough to be put on a standard size sheet.

3rd. Select the size sheet best suited to that particular drawing, allowing ample room for space between views, for dimensions, notes, title, etc.

4th. Plan the placing of the views on the sheet so that they shall have the proper relative positions and proper amount of space. The draftsman should have a mental picture or else a rough sketch of the whole sheet before he starts drawing.

5th. Draw temporary trimming and border lines and line in the title space.

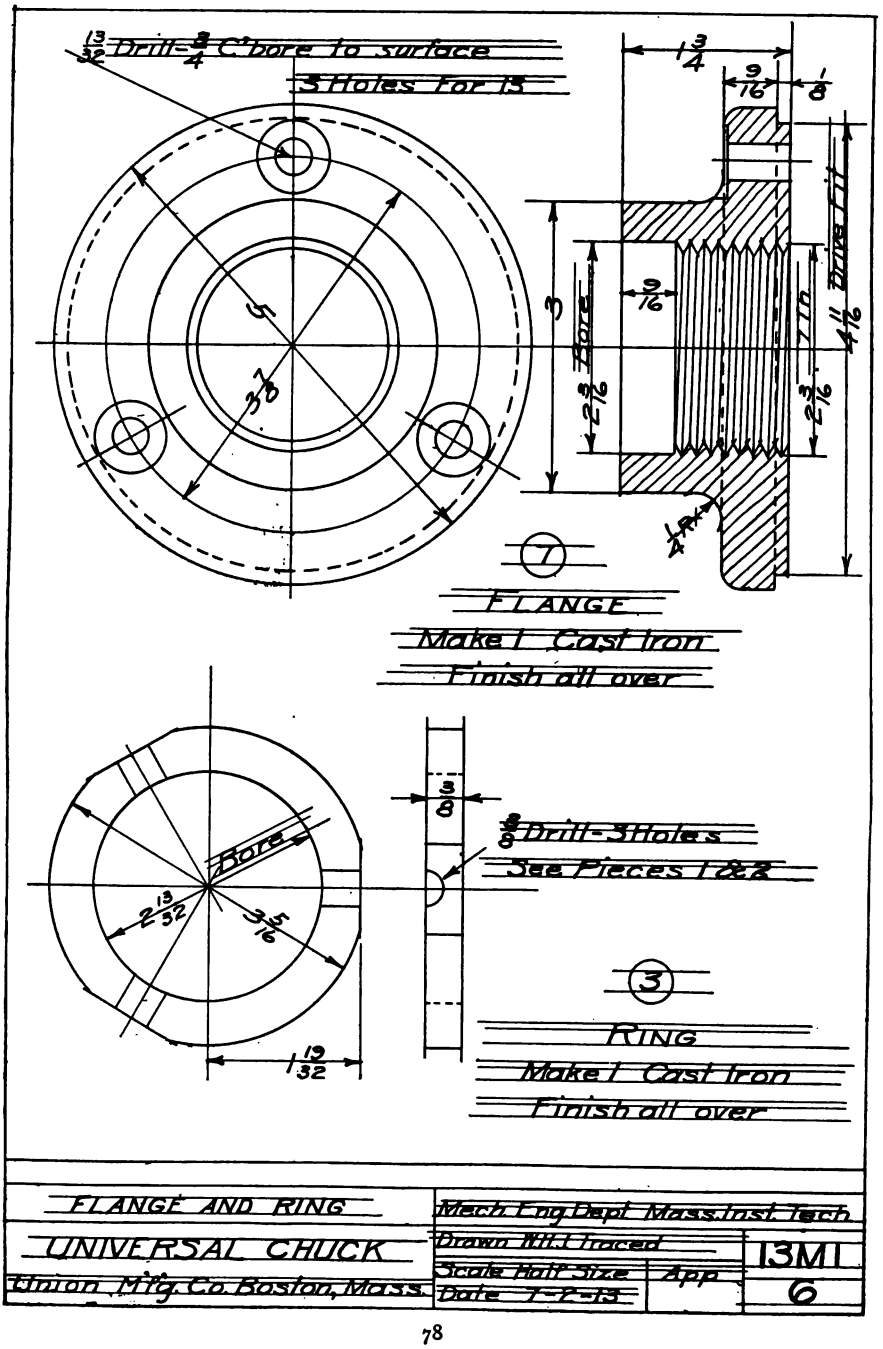

FLANGE AND RING	Mech. Eng. Dept. Mass. Inst. Tech.	
UNIVERSAL CHUCK	Drawn Mild Traced	13M1
Union Mfg. Co. Boston, Mass.	Scale Half Size / App.	6
	Date 7-2-13	

6th. Draw the main center lines and traces of main surfaces for *all* the principal views. It may be desirable to record certain main dimensions at the same time.

7th. With these main center lines and traces as base lines begin to build up the general outline of the piece, carrying all the principal views along simultaneously.

8th. Gradually work from the main outlines down to the more important details and from these to the smaller details still carrying all the principal views along together and at the same time making such auxiliary views and sections as appear necessary to make the various details clear. Here again it may be advantageous to temporarily put on certain dimensions as they are decided upon.

9th. Go over the drawing carefully clearing up all points which may be uncertain, fixing up dotted lines and strengthening up lines as necessary to make all outlines and details plain.

10th. Put on all extension lines, dimension lines and arrow-heads and insert all dimensions, notes, finish marks, etc.

11th. Check over all dimensions and see that the drawing is complete.

In the arrangement of a sheet in machine drawing it should always be remembered that the utility of the drawing is the first essential and other things are secondary to that. If the utility is enhanced by a certain arrangement of views on the sheet that arrangement should be adopted even if the so-called balance of the sheet is sacrificed.

A pencil drawing should be accurate, with a fine but fairly strong line which can be easily seen through tracing cloth. If the drawing is to be traced it may be made on any one of the various kinds of drawing paper, but if the inking is to be done directly on the original paper this must be some thin translucent but strong paper such as a good quality bond.

The Ink Drawing. The ink drawing is the permanent drawing which is filed and used for making blue prints or other reproductions. The prints are the copies which are sent out for use and often a print of each drawing is filed for office or drafting room reference so that no handling of the drawing itself is permitted except when prints are being made from it. As has already been suggested, it is the custom in some drafting offices to make all permanent drawings on tracing cloth; that is, after the pencil drawing on paper is completed to spread a sheet of tracing cloth over it and trace the drawing in ink on the cloth. In other places the pencil drawing is made on some material which is translucent, such as bond paper, and inked directly on that.

The general operation of inking is practically the same whether on tracing cloth or paper. A good method of procedure is to select a portion of the drawing which can probably be finished at one sitting and start work on that, putting in circles and arcs of circles first, then the straight lines which connect with the arcs, thus filling in the outline of the piece first and later putting in crosshatching, center lines, extension lines, dimension lines, arrow-heads, dimensions, and notes in the order named. Some draftsmen prefer to ink the center lines first.

General Example. Plates XIII to XVIII are reproductions of the tracings of a complete set of details of a universal chuck and illustrate most of the points to be considered in the matter of arrangement of pieces and views, manner of representation, dimensioning and describing, piece numbering, title, drawing number, etc. Of course the system here used is only one and there might be a good many others just as satisfactory. This example is merely intended to show in a systematic way the application of the principles and methods which have been discussed in detail in the foregoing pages.

It will be noticed that on Sheet 1 a complete list of all the parts is given with the piece number of each and the number of the drawing on which it is shown. If the piece is standard it is not drawn but simply described in the list and the piece number for the piece with which it is used is given. The large number in the lower right-hand corner of the title space is the drawing number for that sheet. For example, the drawing number for sheet 3 is 13 M 1–3 where 13 M1 is the machine number and is common to all the drawings of that machine while 3 is the special number of that individual sheet of the set. For convenience in the title the 13 M 1 is put on one line and the rest of the number below it. Other details of the title and of the drawings as a whole will be evident from a careful inspection.

Plate XIX is an assembly drawing of the chuck and will be discussed in Chapter VI.

Piece No.	No Wanted.	Name
1	1	Back Housing
2	1	Front Housing.
3	1	Ring
4	1	Bevel Gear 10P. 1(
5	1	Bevel Gear 10P. 48
6	3	Jaw
7	1	Flange
8	6	Round Hd. Cap Sc.
9	3	Round Hd. Cap Sc.
10	3	Round Hd. Cap Sc.
11	3	Round Hd Cap Sc
12	3	Headless Set Sc. F
13	3	Sq. Hd. Cap Sc. $\frac{3}{8}$ x

PART LIST

UNIVERSAL CHUCK

Union M'f'g Co. Boston Mass.

M
D
6
D

1/4 TO
F

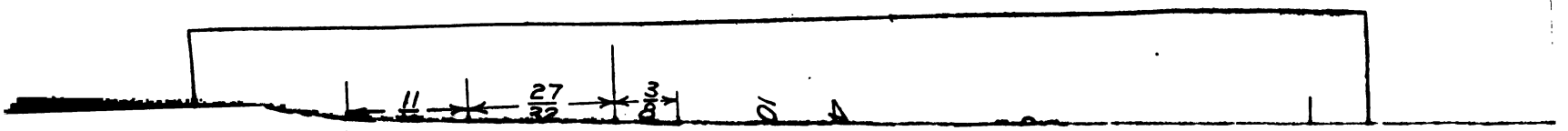
11
27/32
3/8

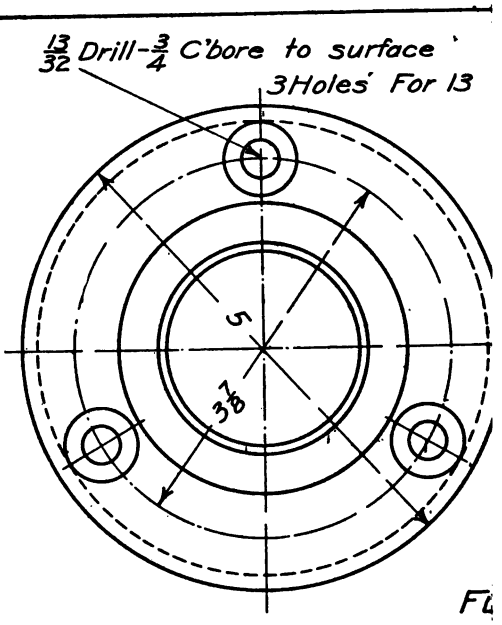

Fl
Make 1
Finish

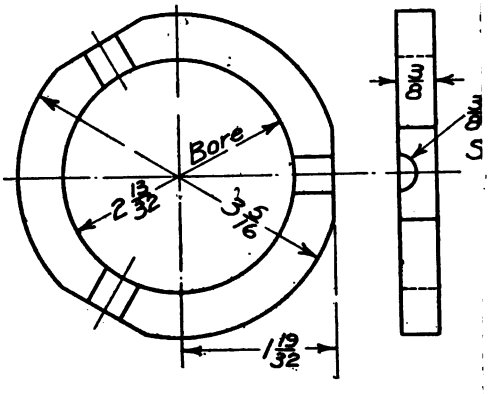

FLANGE AND RING	Mech
UNIVERSAL CHUCK	Draw
Union M'f'g. Co. Boston Mass.	Scal
	Date

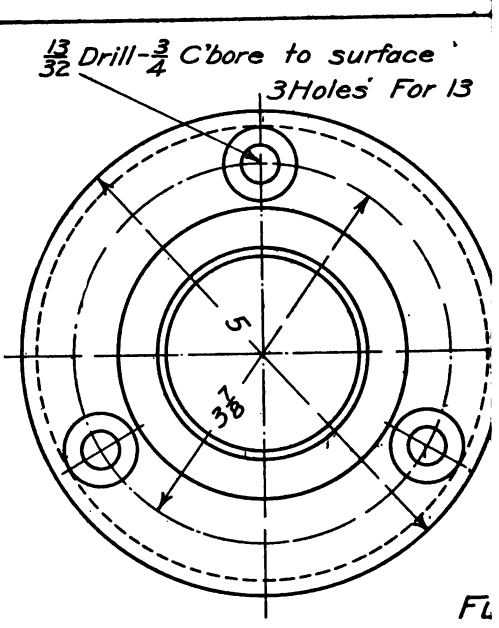

Fl
Make I
Finish

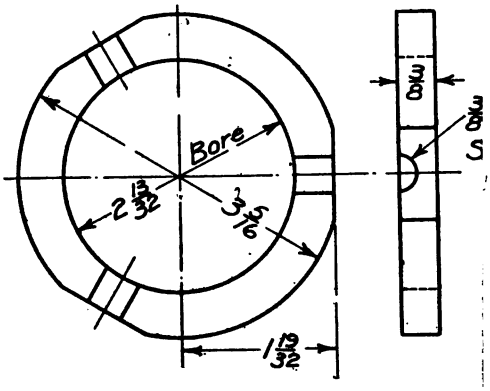

FLANGE AND RING	Mech
UNIVERSAL CHUCK	Draw
Union Mfg. Co. Boston Mass.	Scal / Date

PLATE XIX

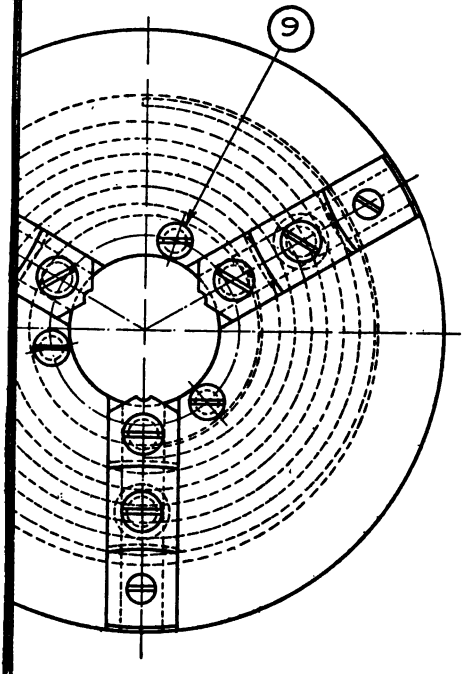

	Mech. Eng. Dep't. Mass. Inst. Tech.		
UCK	Drawn M.C.M. Traced M.C.M.		13M1
n Mass.	Scale Half Size	App	A1
	Date 7-3-13		

CHAPTER VI

GENERAL DRAWINGS

A General Drawing of a machine may be either one of the following:

1. *Assembly Drawing*, which is a complete drawing of the machine with all parts in position.

2. *Outline Drawing*, which is a sort of orthographic picture of the outside of the machine.

3. *Design Drawing* — that is, a " sketchy " assembly, accurately made but not at all complete. Drawings of this sort are made in the process of designing.

4. *Diagrammatic Drawing*: used to suggest ideas, also accurately drawn, to investigate the action of certain parts.

5. *Layout Drawings*: such as layouts for foundations, drives, piping, wiring, etc.

This classification is only a broad one and there is not always a sharp line of distinction between the different kinds. In fact the same drawing may often fulfil several purposes. In the present chapter we will discuss the Assembly and Outline Drawings. Design Drawings and various Diagrammatic Drawings will be considered in later chapters. The discussion of Layout Drawings is not properly within the scope of the present book. The order in which we discuss the several kinds does not necessarily indicate anything with regard to their relative importance or the order in which they would be made in practice. This order is chosen because the student is more likely to come in contact with the Assembly Drawing before he does the other general drawings and the Outline and Design Drawings are in a sense modifications of the Assembly. In practice the Design Drawing would be made first, the Detail Drawings worked up from the Design Drawing, and the Assembly either built up by filling in the details on the Design Drawing or by redrawing completely from the Details.

Assembly Drawings. On Plate XIX is a complete assembly drawing of the universal chuck already referred to. In this instance three views were necessary to show all parts and make the construction clear. In the middle is a vertical section through the axis. This may for convenience be regarded as the principal view and it so happened that it was

possible to show every piece, or at least one of every set of pieces in this section either in full or dotted lines. At the left there is represented in full lines all that would be visible when looking at the left end of the piece and in addition some of the internal parts are dotted. The view at the right shows in full lines all parts which would be visible when looking from that side and in dotted lines such of the internal parts as do not appear in the left view. The purpose has been to show every piece in at least two of the views. It would have been possible to dot, in the left view, all parts which are shown in the right view and thus omit the right view entirely. The resulting drawing would have been so complicated, however, that it would have been difficult to understand; consequently it was better to make the views from both ends. Only those invisible lines are dotted which help to make clear how the parts fit together while dotted lines which would merely show the detail of construction of the individual pieces are omitted. The figures enclosed in circles are the piece numbers of the pieces which the pointers indicate. These are, of course, the piece numbers which are given with the various pieces on the detail drawings.

This is a typical assembly drawing of a small piece of apparatus. In the case of a larger machine, with other complicated details not easily shown in two or three views, a number of other views or partial views and sections would very likely be needed. It might then be a wise plan to title the different views so that their relation to each other could be easily understood.

Order of Procedure. The order of procedure in making an assembly drawing depends upon the nature of the work. We will assume that we are to make an assembly of a machine of which all the detail drawings are at hand and briefly suggest the successive steps in the process.

The first step is, of course, to decide what views are to be made and how they should be placed. Then by a rough calculation the outside dimensions of each view should be determined. Knowing the size of sheet to be used for the drawing the scale can now be decided upon. After these preliminary matters are settled the important steps in the actual work of drawing may well be taken up in the following order:

1. Establish main center lines and traces of important finished surfaces for all views. These lines should be located accurately and distances apart checked by calculation wherever possible. They will serve as base lines from which to lay off measurements, and should be lettered temporarily so as to be quickly identified.

2. Draw the principal moving parts, starting with center lines, then outlining the pieces. In this connection, as well as all through the work it is extremely important that all views be carried along together, and that all measurements be checked by calculation.

3. Draw those portions of the supports to which the moving parts are directly attached.

4. Make any partial views or auxiliary sections that may have been found necessary to make things clear.

5. Work in the less important details and go over the whole drawing carefully to check completeness and correctness.

While the above will serve as a guide for the general order of procedure in making an assembly drawing, the nature of the machine will

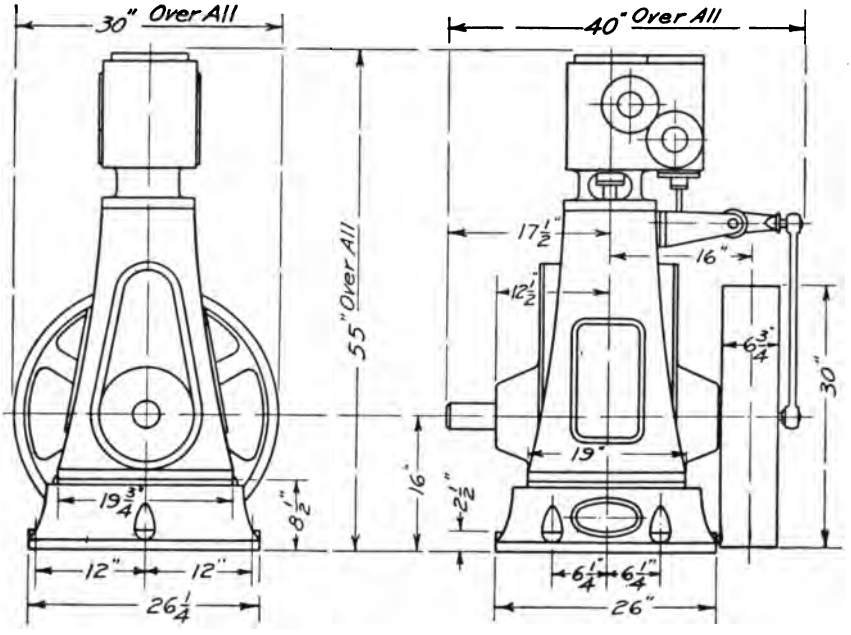

FIG. 151.

have much to do with the exact way of carrying it out. The draftsman should, when starting on the work, plan ahead so that he may know from the beginning pretty definitely what is to be done. In this way he can make each step serve the ones which are to follow and so work far more efficiently than is possible if he starts in hit or miss, doing whatever suggests itself first.

A very common tendency is to draw too many of the lesser details before putting in the more important pieces. The result of this often is that many of them have to be drawn over because changes are found necessary when the main pieces are drawn. The aim should always be to draw first those pieces on which the most depends and changes in which would cause changes in many other places.

Outline Drawings. An Outline Drawing, as has already been stated, consists of a view or views of the outside of the machine, drawn in orthographic projections, but really serving as a picture of the machine. Such drawings are usually made at a small scale and are used to give a general idea of the appearance of the machine and the space required by it. A few main dimensions are given.

As a rule the Outline Drawing furnishes data for making the Layout Drawings of the foundation, drive, etc. Fig. 151 is an example of an Outline Drawing.

CHAPTER VII

DESIGN DRAWINGS

The work of designing a machine may be separated into three main divisions:

1. Determining the mechanisms and the arrangement necessary to accomplish the end desired.

2. Determining the materials, proportions and construction of the various parts in order that they may be strong enough to bear the stresses which must come upon them and be practical both to manufacture and to use.

3. Making the drawings.

In an actual design all three of these branches of the work should be carried along together. The idea for the mechanisms and their grouping into a machine is partly worked out by means of preliminary rough sketches, after which a few preliminary calculations may be made for main dimensions. Then the general design drawing is started. As this proceeds the mechanisms are worked out more in detail and the original ideas modified where necessary. At the same time the proper dimensions and forms of parts are worked out by calculation, or by reference to handbooks or other sources of information regarding good practice along the line of work in question, or else determined by the draftsman's own knowledge and judgment.

It is not the province of a book on drawing to deal with the invention of mechanisms or the calculation of the strengths of parts except as reference to those sides of the question may be necessary in the discussion of the drawing itself. It is our purpose in the present chapter to assume that we have at hand all data concerning the important dimensions of some definite machine and to discuss somewhat in detail the process of making the "General" Design Drawings. We will assume that we are to make the Design Drawings of a small single-cylinder two-cycle gas engine and that all dimensions are known except such as are determined directly on the drawing.

Plates XX to XXIII contain the Design Drawings for the engine in question. On Plates XX and XXI are the plan and the two elevations

PLATE XX

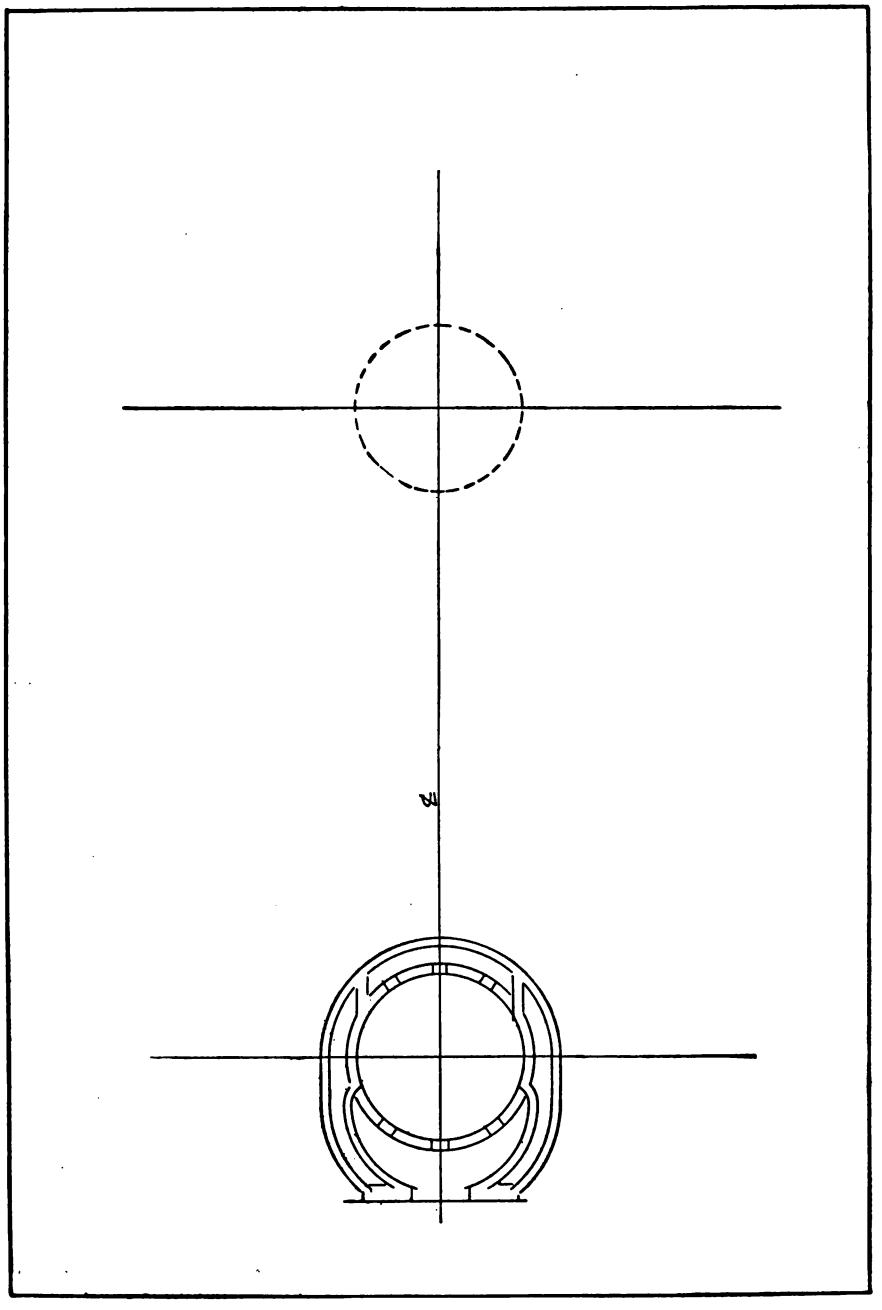

PLATE XXI

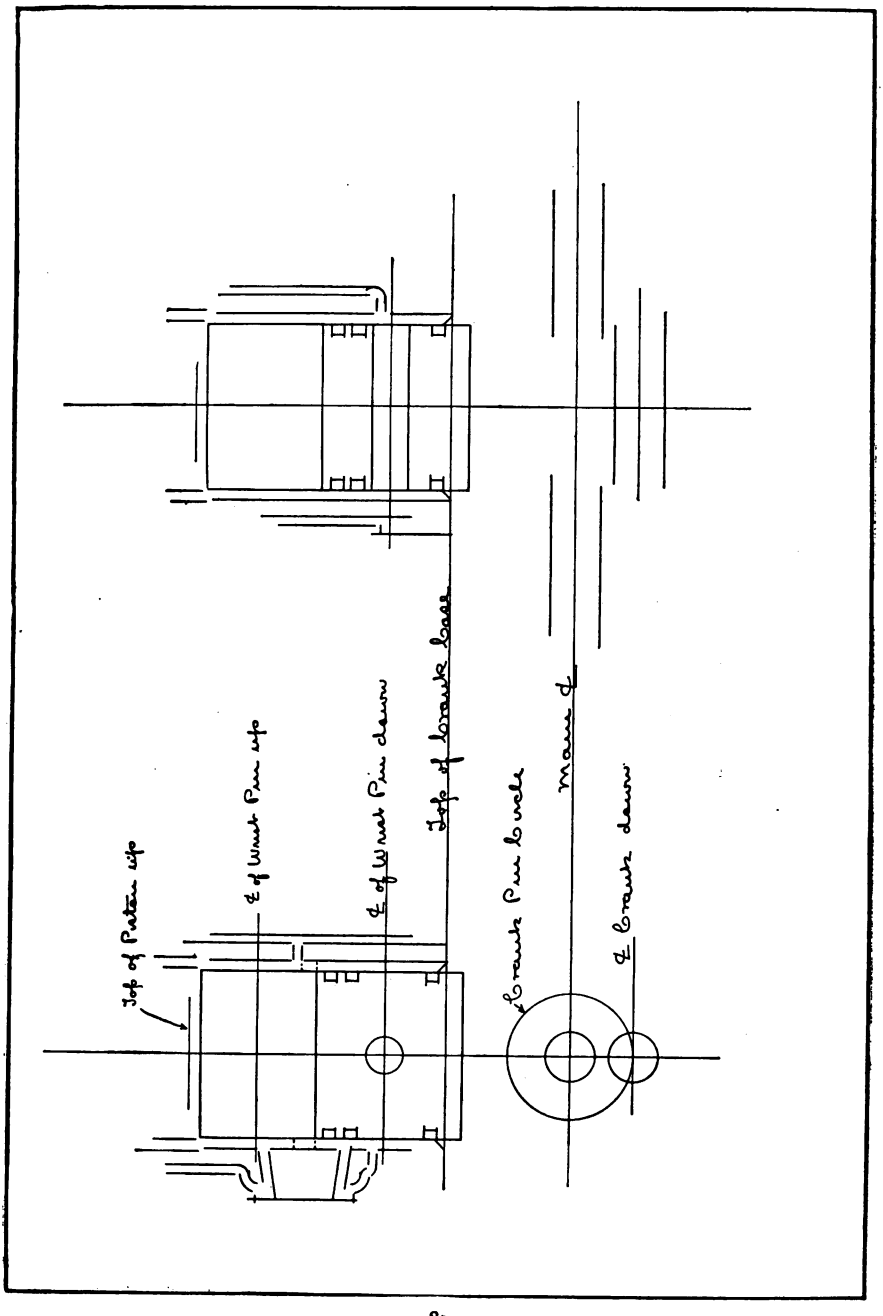
Top of Piston up
℄ of Wrist Pin up
℄ of Wrist Pin down
Top of Crank Case
Crank Pin bolts
Main ℄
℄ Crank down

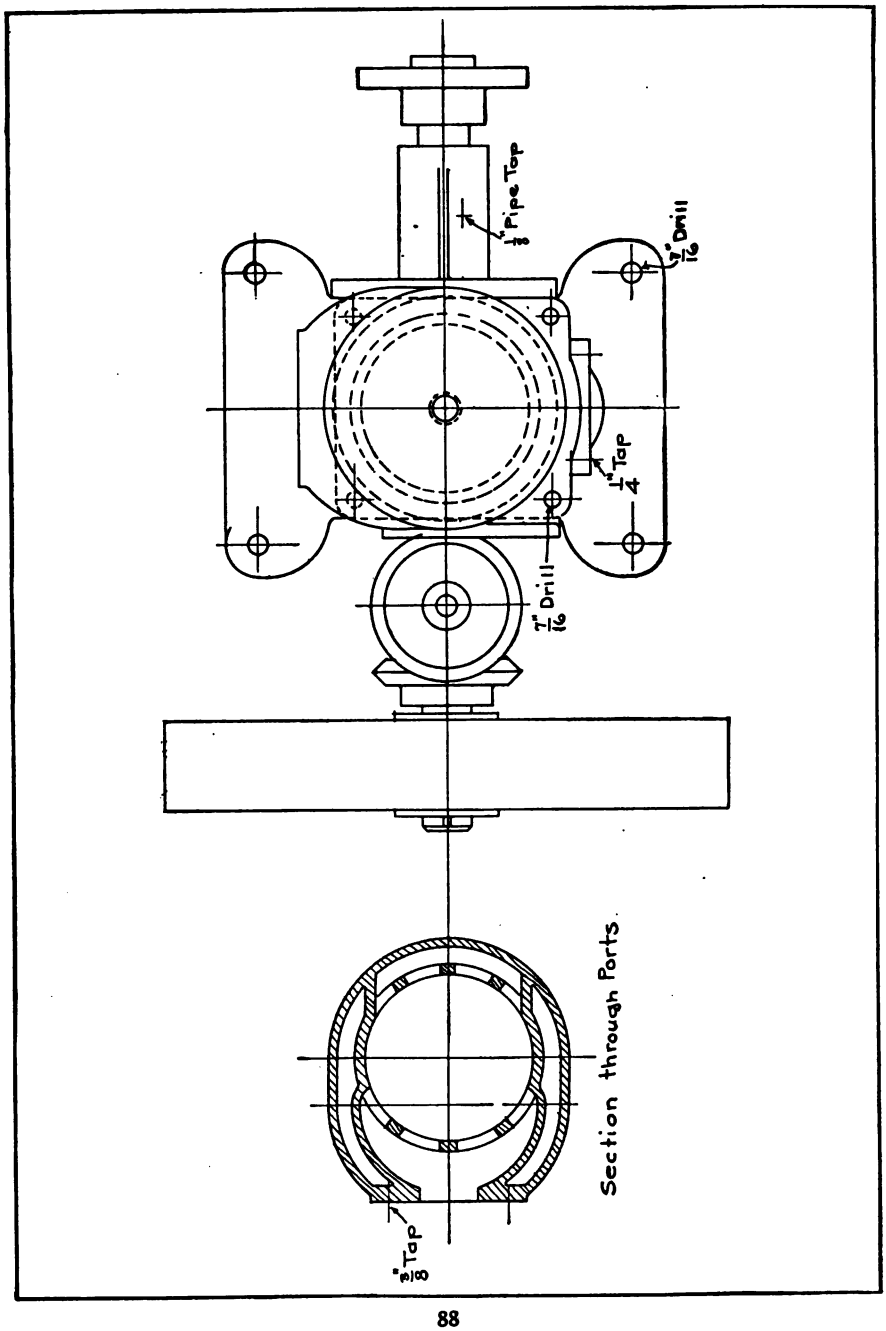
1/8" Pipe Tap
7/16" Drill
1/4" Tap
7/16" Drill
3/8" Tap
Section through Ports

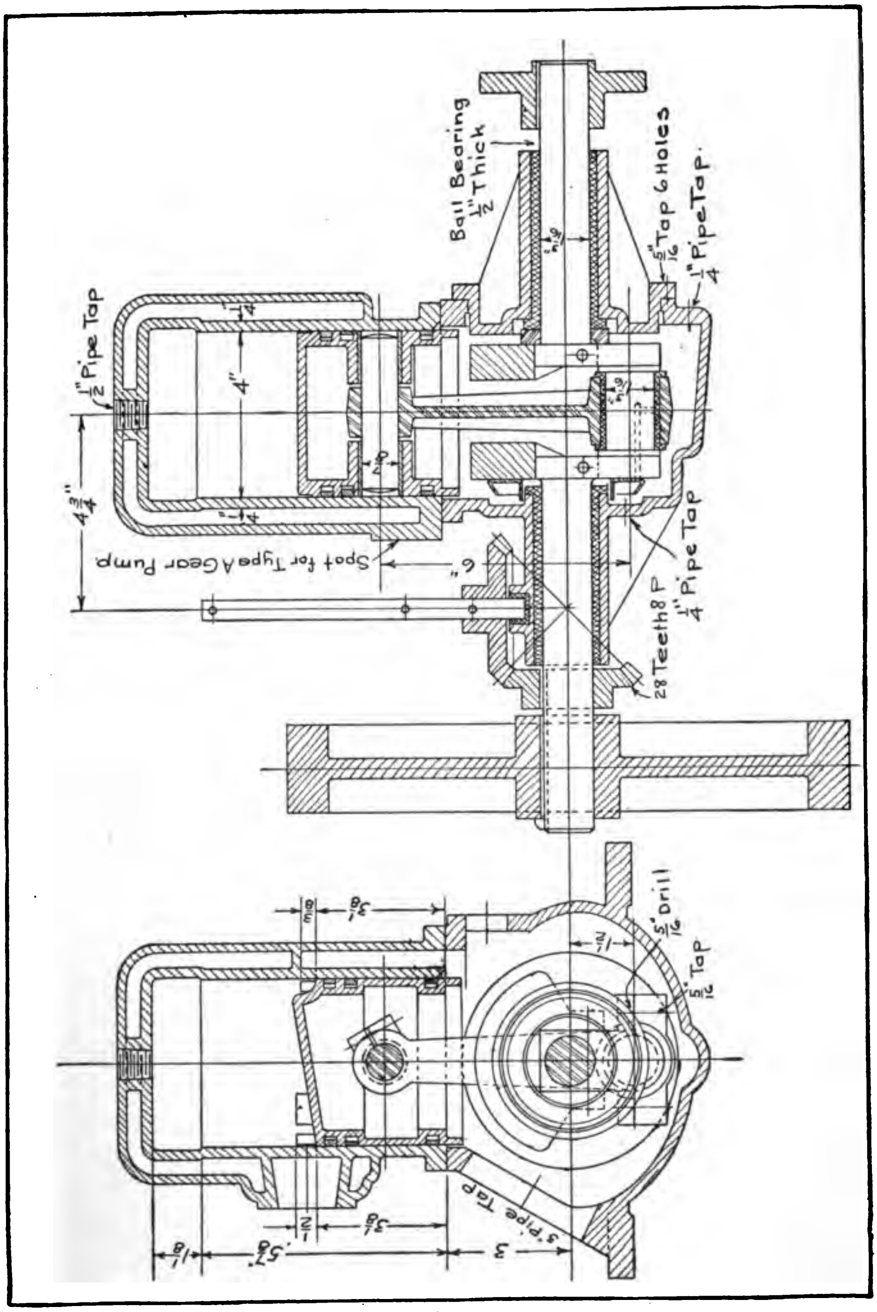
Ball Bearing
1/2" Thick
5/16" Tap 6 Holes
1/4" Pipe Tap.
1/2" Pipe Tap
Spot for Type A Gear Pump.
28 Teeth 8 P
1/4" Pipe Tap
5/16" Drill
5/16" Tap
3" Pipe Tap

respectively when the drawing has progressed a little way, while Plates XXII and XXIII show the same drawings completed.

Given the diameter of the bore, the length of stroke and length of connecting rod (that is, distance from center of crank-pin to center of wrist-pin) the drawing may be begun at once. No special care need be taken to accommodate the drawing to any standard size sheet. The views needed having been decided upon and a rough guess having been made as to the outside dimensions of each view if drawn full size, the scale is selected (this should be full size if possible) and a piece of paper selected large enough to take all views if possible, and if not, then enough sheets laid out on separate boards to take all views. In either case preparation must be made to start all views at once.

First draw the center line through the cylinder in both [illegible] then the [illegible] and a cross [illegible]. Draw the crank-[illegible] vertical center line [illegible] line of the crank [illegible] the lower dead center [illegible] locating the [illegible] pin circle [illegible] have been drawn. From the center of the [illegible]. Draw the inside contours [illegible] which represent [illegible] crank-pin [illegible] as they [illegible] the piston and [illegible] wrist-pin, [illegible] Plates XX and XXI. Knowing [illegible] may next be [illegible] finished [illegible] dimensions which were [illegible] rules of good [illegible] however, [illegible] two ends of the [illegible] drawing itself. A [illegible] a piston [illegible] the lower end [illegible] lowest piston ring [illegible] the upper end [illegible]

[illegible] drawing of the ports, [illegible] are determined [illegible] most desirable, [illegible] walls and jackets [illegible] knowledge of what has been found in practice to be most desirable [illegible]

while the location of the ports (in the elevations) is determined by the position of the piston at the time the ports are to open or close.

It is not necessary to carry the discussion further as the foregoing will serve to suggest the method of handling such a problem and the remainder of the drawing is completed by working along the same lines.

One important point to be considered in the design of any machine, and one which must be determined on the drawing itself, is the avoiding of interference of the various parts. In this connection the need of working on all views at the same time is particularly evident.

The above is not intended in any way to be taken as a discussion of the method of designing a gas engine. We have merely attempted to show the way in which the drawing is made use of in the process of designing a machine. The same principles would apply whatever the machine.

In the finished Design Drawings, Plates XXII and XXIII, it will be noticed that the designer has drawn all the parts which are of sufficient importance for him to design personally and the drawing may now be passed on to a " detail man " to make the Detail Drawings, taking all dimensions possible from the Design Drawing and working up the rest of the details himself under the general direction of the designer. As the various details are worked up they may be drawn in on the Design Drawing as a check, the resulting drawing being a complete Assembly, or the Design Drawing may be preserved as it is and an Assembly made after the Detail Drawings are completed or while the work on the Detail Drawings is being done.

CHAPTER VIII

DIAGRAMMATIC DRAWINGS

At the beginning of Chapter VI we spoke of Diagrammatic Drawings as one of the classes into which General Drawings may be divided. The Diagrammatic Drawings themselves may be divided roughly into two groups. 1. Drawing which is merely intended to show the principle of operation of some mechanism or to suggest some idea. Drawings of this sort are similar to the diagrammatic sketches shown in Chapter IV. 2. Drawings which are made with accuracy for the purpose of obtaining certain information. The sketches in Figs. 125 and 126 if drawn to scale would serve as illustrations of diagrammatic drawings of the first group. If Fig. 126 were drawn with great accuracy and used as a drawing on which to determine the velocity of the tool slide at various points in the stroke it would illustrate the second kind of diagrammatical drawings.

No detailed discussion of the first kind seems necessary. The present chapter will be devoted to a consideration of the application of diagrammatic drawings of the second group to the solution of a few elementary problems in connection with machinery, such as determining the relative location of pulleys for belt drives; finding the position of holes for a belt which passes through a floor or partition; designing of cams; investigating and representing by curves the velocity of a slider driven by a crank and connecting rod, and similar problems.

Drawings for a belt drive may serve both as diagrammatic drawings on which the draftsman determines the relative location of pulleys, position of belt holes, and the like, and also as layout drawings for setting up the drive. As a rule, however, the layout drawing would be made at a smaller scale and show surroundings, location of bearings, etc.

Quarter-Turn Belt. Fig. 152 is a reproduction of the diagram for a simple quarter turn belt drive to run in one direction only. The data with which the draftsman begins is sufficient to determine the location of the shafts, their direction of rotation and sizes of pulleys and belt. His problem consists of determining and showing how the pulleys must be placed relative to each other and how the belt shall pass over the pulleys

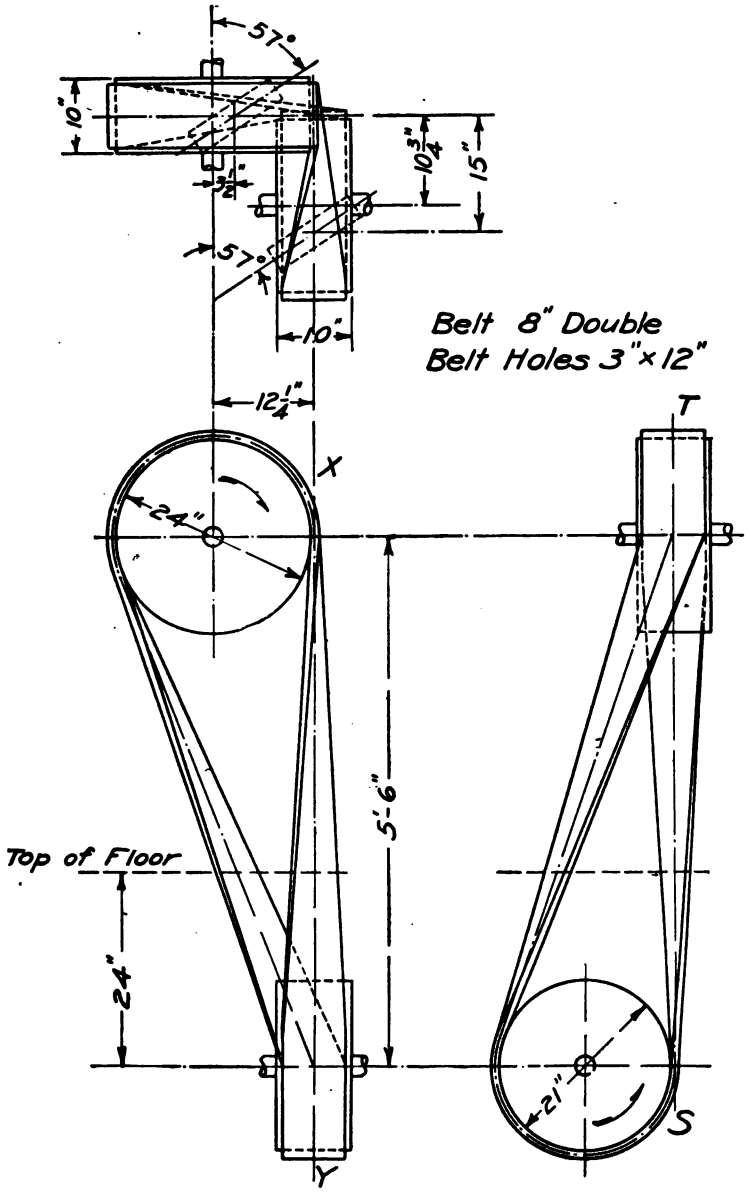
57°
10"
10¾"
15"
57°
10"
Belt 8" Double
Belt Holes 3"×12"
12¼"
T
X
24"
5'-6"
Top of Floor
24"
21"
S
Y

FIG. 152.

in order to fulfil the required conditions. Also, if the belt must pass through the floor, to determine and show the location of the holes in the floor. The relative location of pulleys depends upon the law of belting that a belt must always be delivered into the plane of the pulley toward which it is running. To make the drawing we first locate the center line of each shaft in both elevations and put on arrows to indicate the directions of rotation. Start with either pulley, say the upper one, and draw the pitch line in that view where the pulley shows as a circle, also draw the circumference of the pulley itself. Locate the lower pulley by drawing the line XY tangent to the pitch line of the upper pulley on the delivering side. The point where XY intersects the center line of the lower shaft will be the center of the lower pulley, which will appear in this view as a rectangle. Next draw the other elevation of the lower pulley, which will be a circle, and locate the rectangle representing the second view of the upper pulley by drawing ST tangent to the pitch circle of the lower pulley on the delivering side. The plan view may be placed above either elevation, and is constructed from the elevations by the ordinary methods of projection.

The above construction takes into account the thickness of the belt in locating the pulleys, that is, the locations are worked out from the pitch lines. Practically, this is often neglected and locations made directly from the pulley surfaces. In drawing the belt itself it is customary to represent the edges by straight lines although they are in reality curves. The belt is also represented as coming off the pulley abruptly at the point where its pitch line is tangent to the pitch line of the pulley. The twist of the belt is shown by drawing the three visible corners.

The center lines of the belt holes may best be located by finding the projection in plan of the points where the pitch line of the belt pierces the upper surface of the floor, calling these the center points of the two holes, and calculating the angle which the center line of the hole makes with the axis of one of the shafts. This is done by dividing the angle through which the belt twists in passing from one pulley to the other into parts bearing the same ratio to each other as the distances into which the floor divides the distance between the pulley. For example, in Fig. 152 the belt twists approximately 90° in a distance of 5′-6″. The floor is 24″ above the lower shaft so that when the belt has reached the top of the floor it has twisted through $\frac{24}{66} \times 90°$ or about

33°. The belt holes are practically parallel and make an angle of 33° with the lower shaft or 57° with the upper shaft. The holes are dimensioned by giving the location of the center point, the angle which the long axis makes with one of the shafts (the one from which measurements could most easily be made in setting up) and the size of the holes. The drawing as a whole is dimensioned by giving all dimensions which are found by means of it and most of those used in making it.

Reversible Quarter-Turn With Two Guide Pulleys. Fig. 153 shows the diagram for a reversible drive connecting two shafts at right angles with each other, two guide pulleys being used. The data is the same as for Fig. 152 and in addition it is assumed that the usual direction of rotation is as shown by the arrows, that the upper pulley is the driver and that the "tight" side of the belt runs direct between driver and driven pulley. The diameters of the guide pulleys are also known as well as the distances of their respective shafts from the main shafts. The shafts for the guide pulleys are assumed to be horizontal. The problem consists in finding and showing the relative location of all the pulleys, and the angle which the guide pulley shafts make with the other shafts; also the way the belt passes around the pulleys. The steps are similar to those in the previous case. First the center lines of the shaft are located in the two elevations, then each of the main pulleys is drawn in the view where it shows as a circle, then located in the other view so as to receive the belt properly. Next the main pulleys are drawn in plan and the guide pulleys located in plan so as to receive and deliver properly. The drawing of the pulleys is completed by projecting the guide pulleys down into the two elevations. The belt is next drawn in the three views and all necessary dimensions given.

If the belt were to pass through a floor the location of the holes would be found in a manner similar to that explained for Fig. 152.

The two examples given above will serve to suggest the use of diagrammatic drawing in the solution of problems on belt driving. The same general method would be used in handling any one of the many types of belt drives.

Plate Cam. In the design of a plate cam a diagrammatic construction would first be made to obtain the cam outline accurately; then the drawing would be complete as a drawing for the pattern maker and for finishing the cam. If the cam outline is to be finished accurately as, for example, in the case of a master cam which is to be used as a guide for the tool in finishing other cams, then a very accurate diagram of the

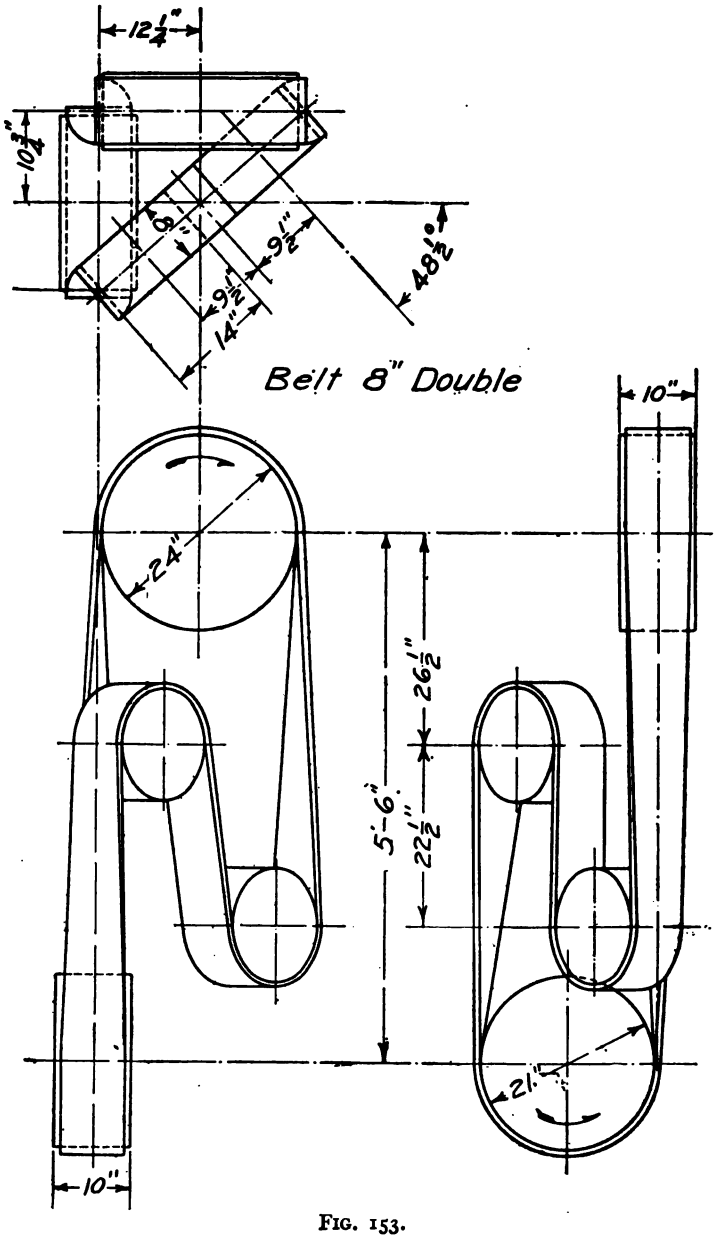

FIG. 153.

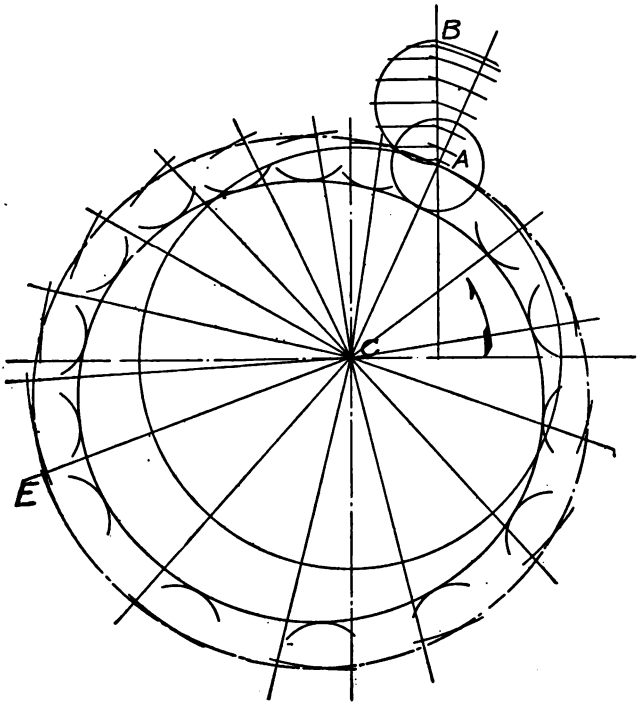

FIG. 154.

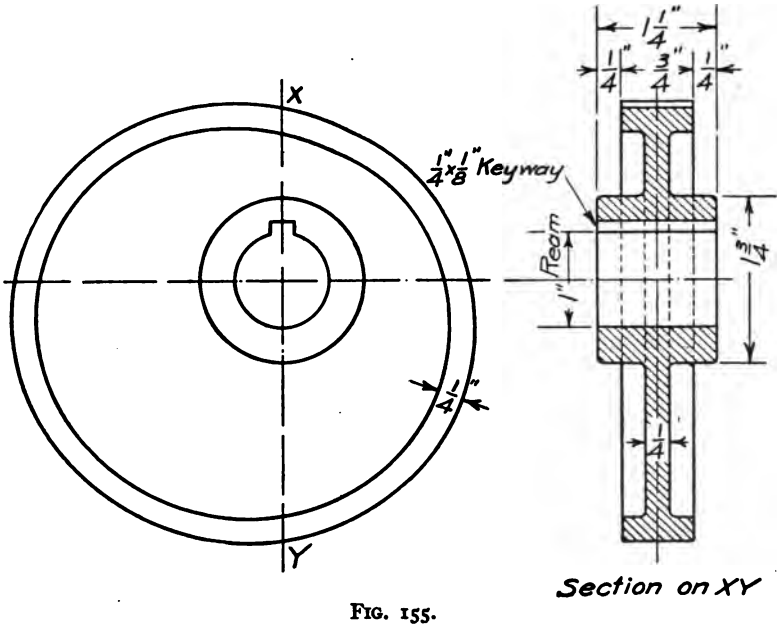

FIG. 155.

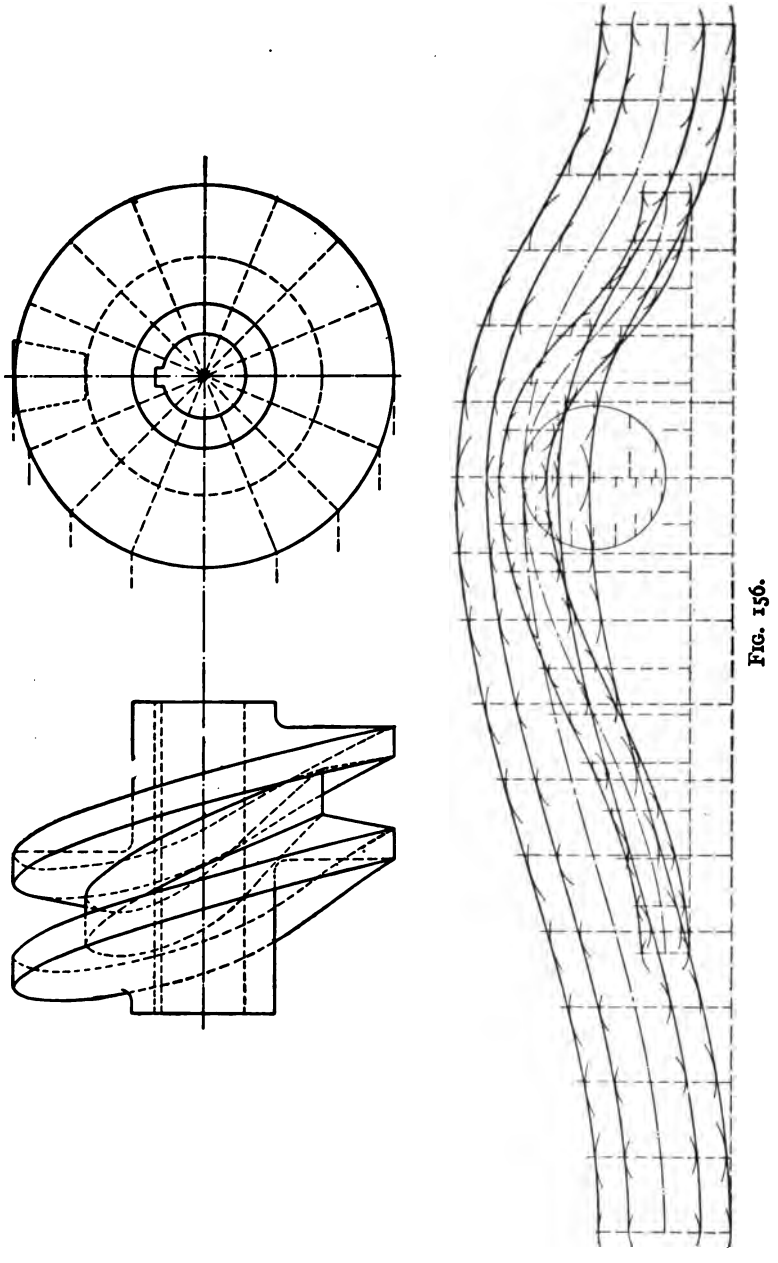

FIG. 156.

cam outline is sometimes constructed on suitable material and cut out to form a template for finishing the cam. Fig. 154 is the diagram for a plate cam and Fig. 155 the detail drawing for the same cam. It is not our purpose to explain in detail the methods for laying out a cam as it is assumed that the reader is familiar with them. The object here, as in the other examples which we have discussed throughout this book, is to show the manner of handling the drawing itself. The cam shown in Fig. 154 is to act on a roller whose center is to rise from A to B with harmonic motion while the cam makes $\frac{5}{8}$ of a revolution, then fall with harmonic motion during the remaining $\frac{3}{8}$ of a revolution of the cam. The drawing is started by drawing the horizontal and vertical center

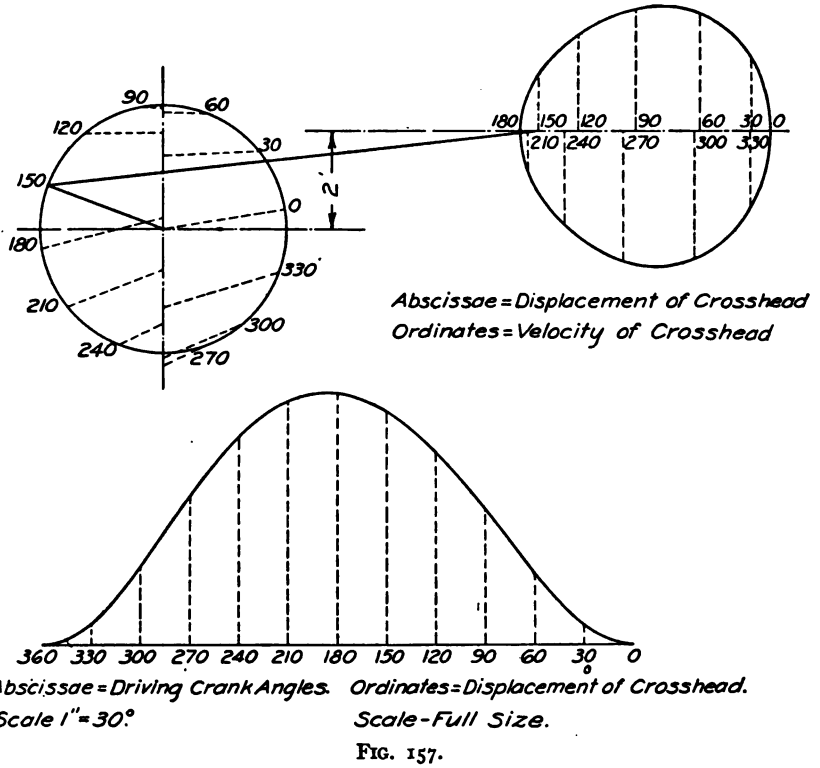

FIG. 157.

lines through the point selected as the center of the cam. The two extreme positions of the center of the follower are next located and the path which the center travels between these points (in this case a straight line) is drawn. Then CA is drawn and from CA an angle $\frac{5}{8} \times 360°$ or $225°$ is laid back, getting the line CE. The cam curve is now plotted

by the usual method. Some of the construction lines are shown in Fig. 154.

Cylindrical Cam. Still another illustration of the combination of diagrammatic work and detail drawing is shown in Fig. 156. This is the complete design of a cylindrical cam. In the process of making the projection drawing of the cam groove it is necessary to first make a development of the cylinder, design the groove on the development, then transfer it to the projection view.

Velocity Diagrams. Fig. 157 is a diagrammatic drawing of a linkage. Such a drawing as this is made to investigate the relative velocities of the various parts of a linkage and to represent the results of such investigations by curves.

CHAPTER IX

MECHANICAL PICTORIAL DRAWING

Reference was made in Chapter I to certain kinds of drawings which were spoken of as one-view representations. The purpose of these drawings is to present to the eye a picture of the object so that a conception of its form may be obtained at a glance. "Pictorial" drawings of this sort are of value for suggesting the appearance of the object to persons who have not the time to study out an ordinary drawing or one not familiar with the principles of projection.

Some of the pictorial representations are illustrated on Plate I and it is our purpose in this chapter to explain briefly the method of making the drawings.

Mechanical Perspective

The first case to be considered is Perspective. Only the simplest possible treatment will be given to the subject here, and no attempt will be made to suggest any of the short-cut methods which would be employed by one who uses perspective drawing frequently. Furthermore, most of the fundamental principles will be merely stated without attempt to demonstrate them. In short, the aim is to give in concise form enough information concerning the subject to enable the engineer to express ideas by a perspective drawing or sketch when the occasion arises.

If we consider an object in space as, for example, a card M with the rectangle $abcd$ drawn on it, Fig. 158, and the eye of the observer at E, then every point on the rectangle which is visible to the observer is thus visible because a ray of light passes from it to the eye. Point a is visible by means of the ray aE, b by the ray bE, etc. Then as far as the appearance of point a is concerned it might be anywhere along the line aE, point b might be anywhere along the line bE, and so on. Consequently, if another card P is interposed anywhere between E and the original card, points $a'b'c'$ and d' located on that card where the lines aE, bE, cE and dE respectively intersect the card P and the lines $a'b'$, $b'c'$, $c'd'$ and $d'a'$ drawn, then the figure $a'b'c'd'$ would appear exactly the

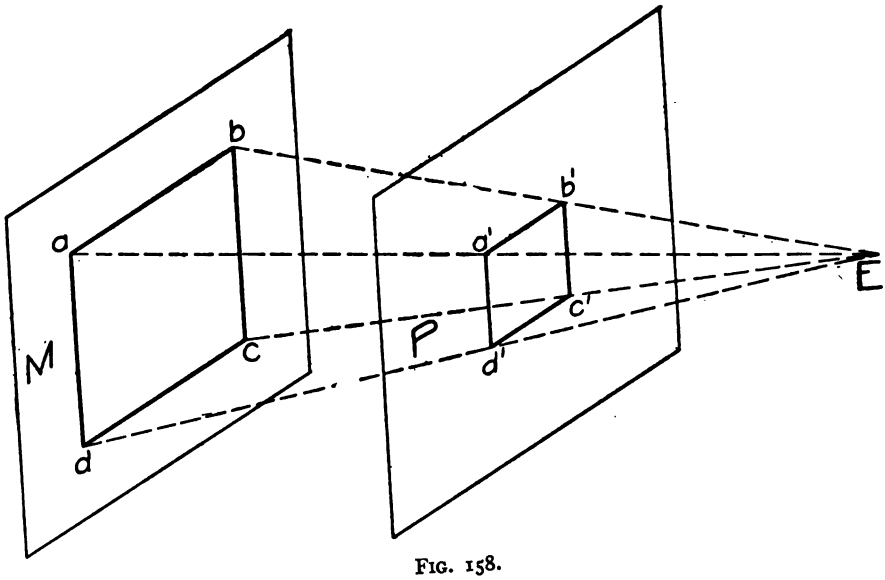

FIG. 158.

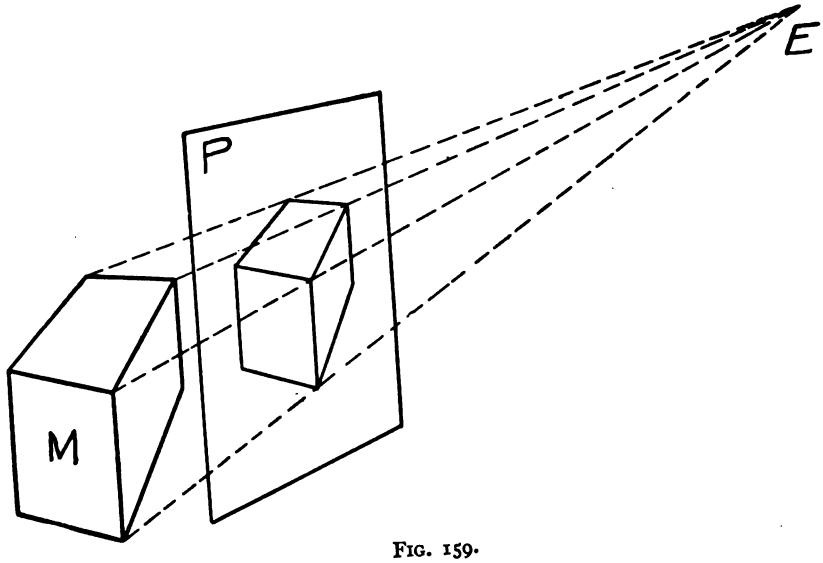

FIG. 159.

same to the eye at *E* as did the original figure *abcd*. In a similar way in Fig. 159 if a plane *P* is interposed between the solid *M* and the eye *E* and lines are drawn on this plane joining the points where the rays from the various corners of *M* pierce the plane *P* the resulting drawing will have the same appearance to the eye as does the solid itself.

Briefly then, Perspective Drawing consists in drawing on a plane called the Picture Plane, which is assumed to be interposed between the eye and an object, the lines of the object as they appear to the eye. The resulting drawing, when looked at with the eye in the same relative position that it occupied when the drawing was made, will have the same appearance as did the object itself.

The free-hand artist makes his perspective sketch by looking at the object and drawing at once on paper the parts as they look. The mechanical draftsman makes his perspective by representing the object and the eye by orthographic projection on coördinate planes, assuming one of the planes to be the picture plane, drawing lines representing rays of light from points on the object to the eye, finding where these rays pierce that coördinate plane which is assumed to be the picture plane, and by joining points thus found, obtaining a perspective representation of the object. The problem is thus one purely of projections.

It is customary to assume the vertical plane as the picture plane, and the object to be located with one corner in the picture plane. Furthermore, the eye is supposed to be in the horizontal plane, which is spoken of as the Horizon Plane. The eye is assumed at a distance from the picture plane about equal to the distance one would be most likely to hold the drawing when looking at it. For drawings such as would be put on a book page 10 or 12 inches would be a fair average distance. For larger drawings the eye should be assumed farther away. In the illustrations which accompany this text the eye is placed nearer the picture plane to bring all the construction lines within the limits of the page.

In order to bring out the principles of the work clearly we will first choose a rectangular parallelopiped and construct its perspective strictly as a problem in orthographic projections. From this we will point out certain facts or "phenomena" which always exists in perspective work. With these facts in mind we will next construct the same perspective view by the usual and more simple method. The picture plane and the horizon plane respectively are the vertical and horizontal planes of projection.

In Fig. 160 the parallelopiped is shown by its two projections $a^h b^h c^h d^h$ and $a^v b^v c^v d^v k^v m^v n^v s^v$ while the eye is represented by the point E called the *Station Point* shown by its projection E^h and E^v. The solid is behind the picture plane, the edge ds is in the picture plane and the top surface $1\frac{1}{8}$ inches below the horizon plane. E is in the horizon plane $2\frac{1}{2}$ inches in front of the picture plane. The problem consists in drawing lines to E from each one of the eight corners of the solid (representing these lines by their projections of course), and finding the vertical projection of the point where each line pierces the vertical plane (that is the picture plane). The figure obtained by joining the points thus found is the perspective view of the solid when seen from the point E. In Fig. 160 the construction is shown for the point c only. The construction for all the other points is exactly similar. $E^h c^h$ and $E^v c^v$ are the two projections of the line from c to E. The two projections of the point where line Ec pierces the vertical (picture plane) are $c_1{}^h$ and $c_1{}^p$ then $c_1{}^p$ is the perspective of point c.

Vanishing Point. It is apparent from observation of objects in nature that parallel lines appear to converge as they recede from the eye and to meet at infinity. This point of apparent meeting is called the vanishing point. Similarly, since the perspective drawing represents the object as it appears, from some definite point of view, parallel lines which recede from the picture plane should converge when represented on the picture plane. The point toward which they converge is the perspective of the point toward which the actual lines of the object appear to converge. In Fig. 160 the lines $a^h b^h$ and $d^h c^h$ meet at infinity, therefore the line joining E^h to the meeting point of these two lines is a line through E^h parallel to $a^h b^h$ and the point V^2 where this line cuts the line HP is the perspective of the vanishing point of ab and dc and of any other line parallel to these two. In other words all lines which are parallel to ab converge on the perspective drawing, to meet at V^2. Similarly all lines parallel to da converge to the point V^1.

By working out the methods just suggested the following will be found true.

1. The perspective of the vanishing point of any system of parallel lines can be found and the perspectives of all these lines will converge toward that point.

2. The perspective of the vanishing point of any system of lines which are parallel to the horizon plane lies in the intersection of the horizon plane with the picture plane (that is in the line HP) on a line

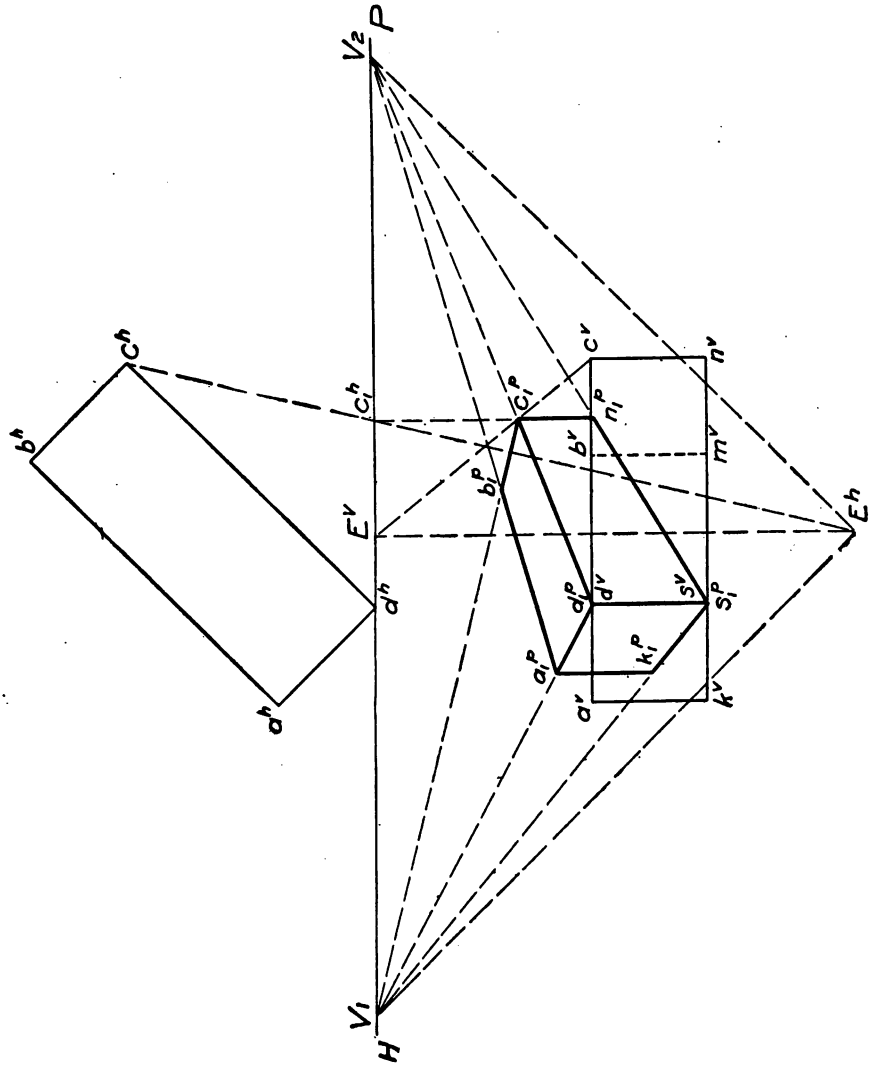

FIG. 160.

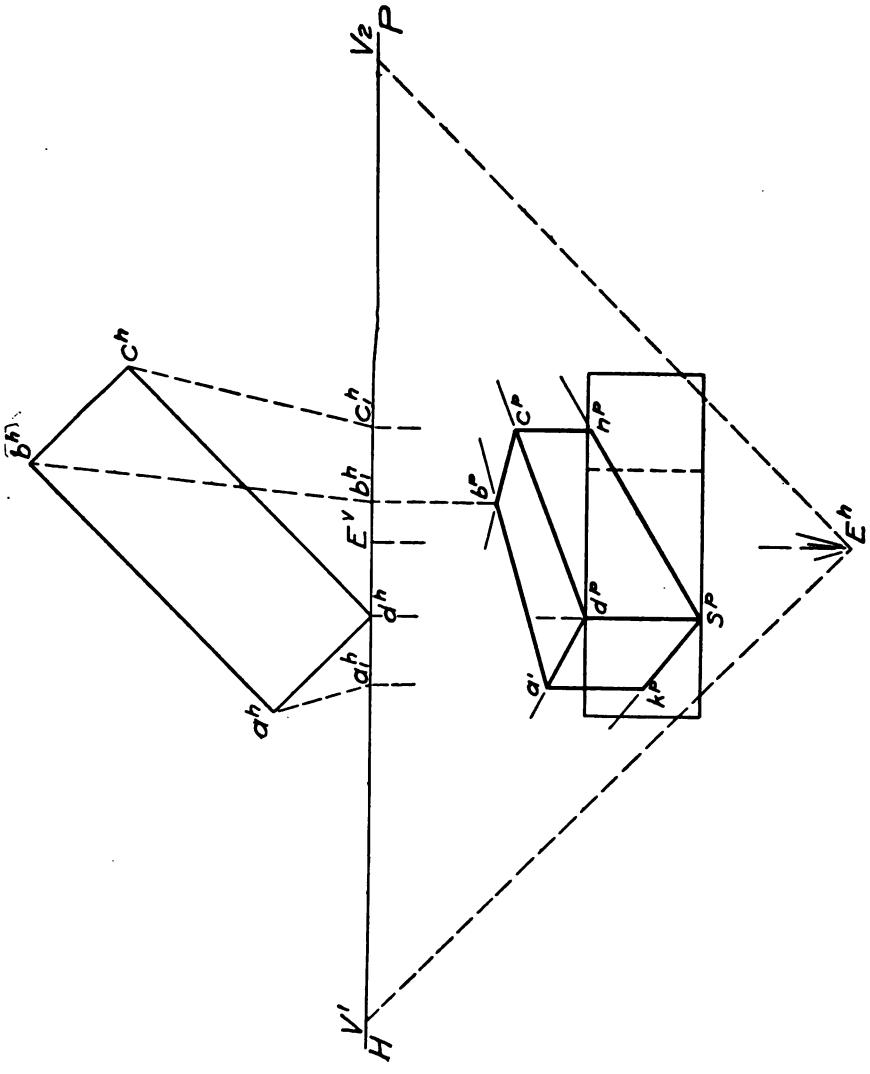

FIG. 161.

through the horizontal projection of the station point parallel to the horizontal projections of the set of lines in question. The perspective of the vanishing point of any system of parallel lines making an oblique angle with the horizon plane will be found by passing a line through the station point parallel to the set of lines in question and finding the point where this line pierces the picture plane.

Examples. The foregoing may be regarded as a general discussion of the principles which are the foundation of perspective drawing. We will now take up a few examples using the vanishing points as aids to making the drawing instead of carrying through the longer method as explained for Fig. 160. Fig. 161 shows the construction for the solid which was used in Fig. 160. The steps are as follows. First draw the plan and elevation of the solid and the station point. Since the edge *ds* lies in the picture plane the vertical projection of *ds* is also its perspective. From E^h draw lines parallel to $d^h c^h$ and $d^h a^h$ respectively, meeting *HP* at V^2 and V^1. These are the perspectives of the vanishing points of the two systems of horizontal lines. From d^p draw lines to V^2 and V^1 and from s^p do the same. From c^h draw to E^h meeting *HP* at $c_1{}^h$.

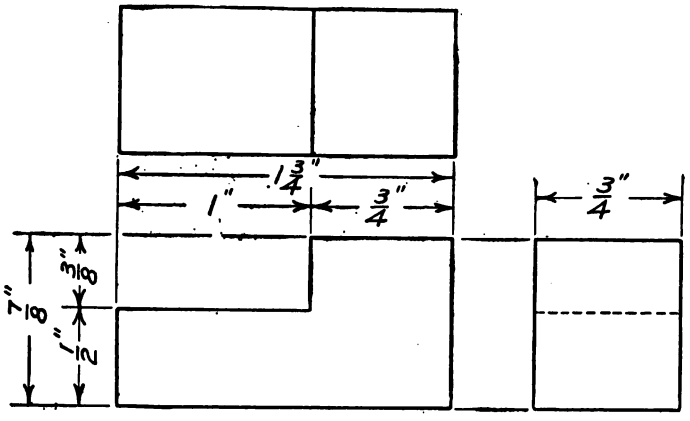

FIG. 162.

From $c_1{}^h$ draw a line perpendicular to *HP* thus finding points c^p and n^p. A similar construction gives k^p and a^p. A line from c^p to V^1 meeting a line from a^p to V^2 at b^p completes the drawing. As a check on the work b^p should be vertically under $b_1{}^h$, found by joining b^h and E^h. Attention should be called to the fact that all heights must be measured on a line which lies in the picture plane. In Fig. 161 the only line which fulfils this condition is *ds*.

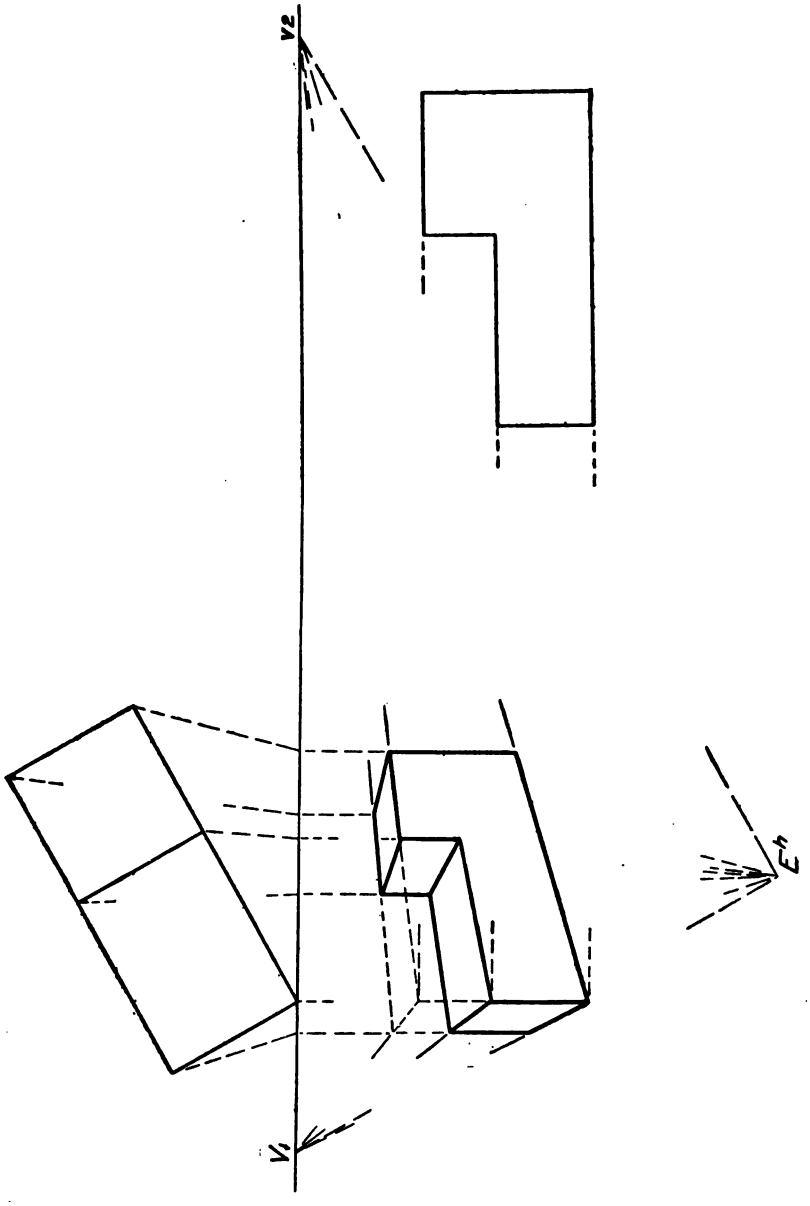

FIG. 163.

Fig. 163 shows the method for the piece represented in Fig. 162. It will be noticed in Fig. 161 that the elevation was used only to obtain heights. Hence a straight side elevation would have served just as well and it might have been drawn off at one side instead of directly under the horizontal projection. In Fig. 163 these modifications of the method of Fig. 161 are used to simplify the work and to avoid confusing the figure. Very little explanation of Fig. 163 seems necessary. The method consists in enclosing the solid in a parallelopiped (as shown by the fine lines) finding the perspective of this as explained for Fig. 161, then finding the perspective of the smaller parallelopiped which represents the piece cut out to form the actual piece which we are drawing.

Another example is shown in Figs. 164 and 165. Fig. 164 is the orthographic drawing of a piece and Fig. 165 shows the construction

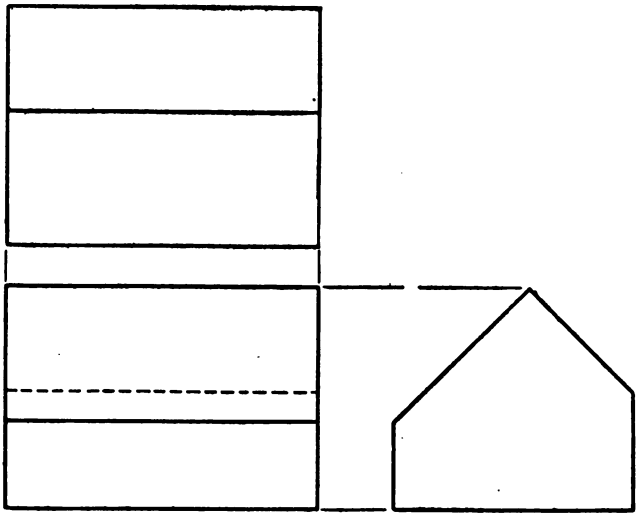

FIG. 164.

for its perspective. Here again the object is supposed to be enclosed in a parallelopiped whose perspective is first drawn then cut away by finding the perspective of the ends of the line *ab*. As a check on the work it might be stated that the perspective of the vanishing point of *da* and *cb* is on a vertical through V^1.

Fig. 166 shows the construction for the perspective of a cube with a cylindrical hole through it. This is fairly representative of the method of finding the perspective of any circle or any irregular outline. Points are chosen at random around the circumference, the projection of each

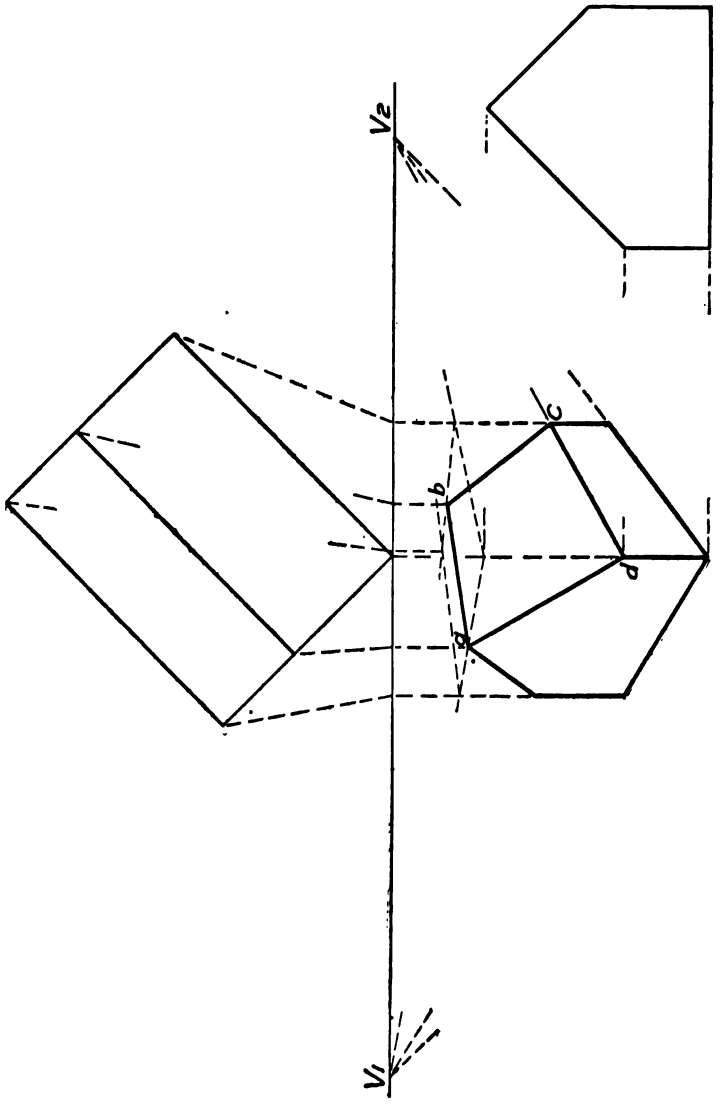

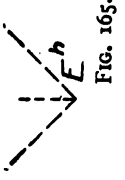

FIG. 165.

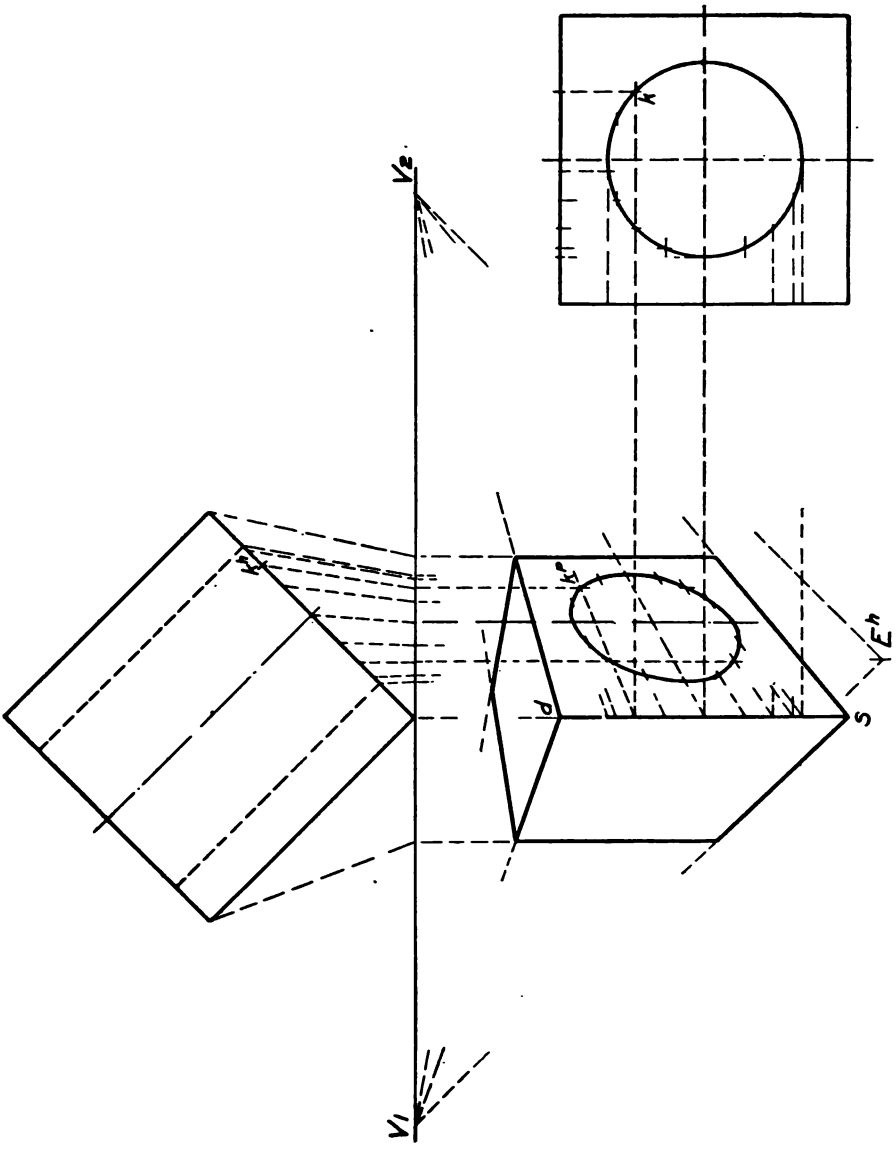

FIG. 166.

of these points is found on the plan and the height of each point above the bottom is located on the measuring line *ds*. Through the points thus found on *ds* lines are drawn to the vanishing point and the perspective of the points are found on these lines by projecting from the plan view in the usual way. The construction for one point *k* is shown completely and all other points are found in the same way.

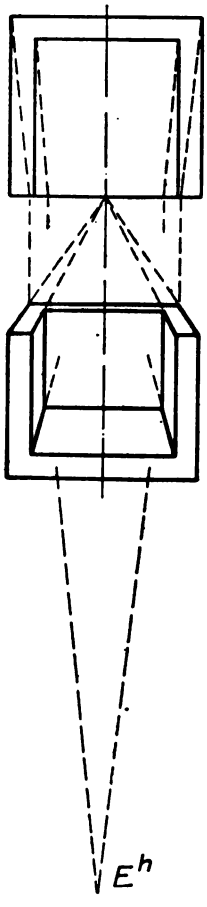

FIG. 167.

Parallel Perspective. In the preceding cases it has been assumed that the principal faces of the object make an angle with the picture plane. It is sometimes convenient to make a perspective drawing representing the object with one set of lines parallel to the picture plane. The station point is often assumed directly in front of the center of the object. One common application of this method is in representing the system of piping in a building where the side wall of the building is broken away and the drawing shows the interior in parallel perspective. (See Fig. 168.)

Fig. 167 shows the method of making a parallel perspective of a simple piece. The principle is the same as in the former cases but since one system of horizontal lines is parallel to the picture plane there is only one vanishing point.

The perspective of the vanishing point of the set of lines which is perpendicular to the picture plane coincides with the vertical projection of the station point.

Isometric Drawing

We have seen that in perspective drawing all lines are foreshortened except those that lie in the picture plane. Of the several methods which have been devised to combine the pictorial effect of perspective with the possibility of measuring directly on the drawing, the most common is Isometric. Briefly stated, Isometric Drawing consists in imagining the object enveloped in a cube and the cube tipped until one diagonal is a horizontal line perpendicular to the vertical plane of projection. This brings three faces of the cube into such a position that they are visible and all edges are foreshortened

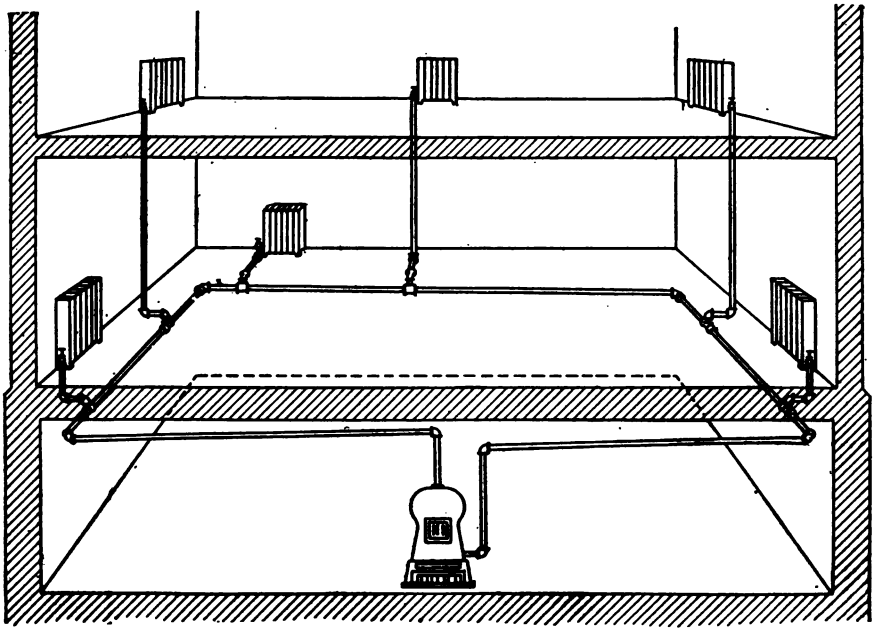

FIG. 168.

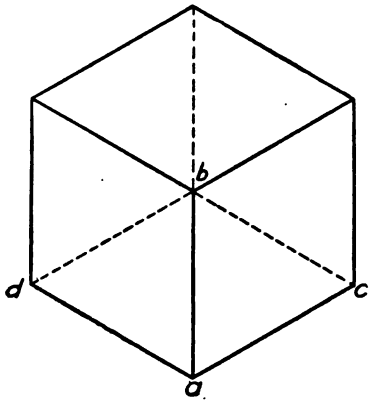

FIG. 169.

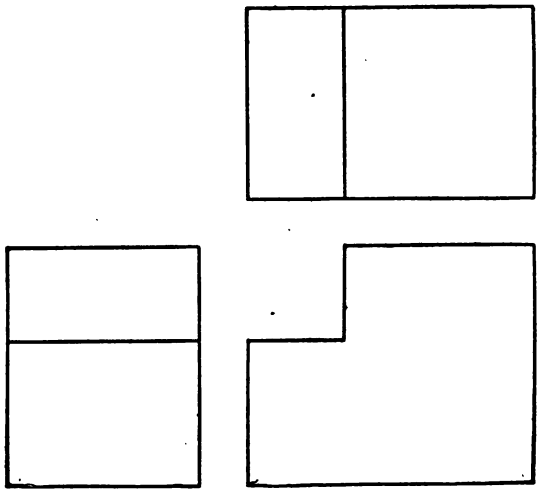

FIG. 170.

by equal amounts. That is, all edges project as lines of equal length. Fig. 169 shows a cube in this position.

The edges *ad* and *ac* make angles of 30° with the horizontal while the edge *ab* is a vertical line. These three lines are called the *Isometric Axes*. Any line on the object which is parallel to one of these lines will appear parallel to it on the isometric view and will be foreshortened by the same amount as the edges *ad*, *ac* and *ab*. It is customary to disregard the foreshortening and to draw true length all lines which are parallel to the isometric axes. All distances not parallel to one of the isometric axes must be laid out by means of coördinates along lines parallel to the isometric axes.

Example. Fig. 171 is an isometric drawing of the block shown in orthographic in Fig. 170. To draw this isometric view we proceed as follows: — Start with the corner *a*, draw the lines *ab* and *ac* making 30° angles with the horizontal and draw the vertical line *ad*. Make the length of each of these lines equal to its true length on the real object. Through *d* draw *de* and *df* parallel to *ac* and *ab* respectively, giving each its true length. Draw a vertical line through *c*. Through *e* draw parallel to *ab* and through *f* draw parallel to *ac* meeting the line through *e* at *n*. Draw verticals through *n* and *f*, measure up the true length *fg* and through *g* draw *gh* and *gm*, parallel to *ab* and *ac* respectively. The point *h* is on a vertical through *b*, *bh* being the true length. The drawing is completed by drawing *hk* and *mk* parallel to *ac* and *ab* respectively.

Circles. Fig. 172 is the isometric view of a piece similar to that in Fig. 171 except that the part which projects at the top is cylindrical instead of square. The piece is first drawn exactly as if it were the same as Fig. 171, then points on the isometric of the circle are found by coördinates parallel to the isometric axes. A separate diagram must be made for finding the coördinates of the points on the curve.

The same method is used to construct the isometric view of any curve either regular or irregular.

It may be observed that the isometric of a circle is an ellipse whose axes coincide with the isometric positions of the diagonals of the square which encloses the circle. This ellipse may be drawn approximately by either of the constructions shown in Fig. 173 where the parallelogram is the isometric of the square enclosing the circle.

Fig. 174 is the isometric drawing of a piece of irregular shape. The construction is evident from the figure.

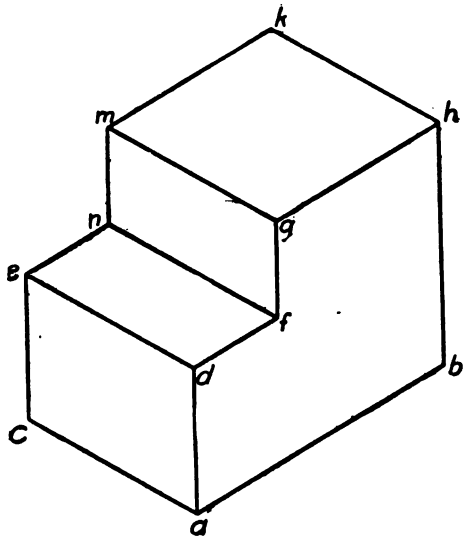

FIG. 171.

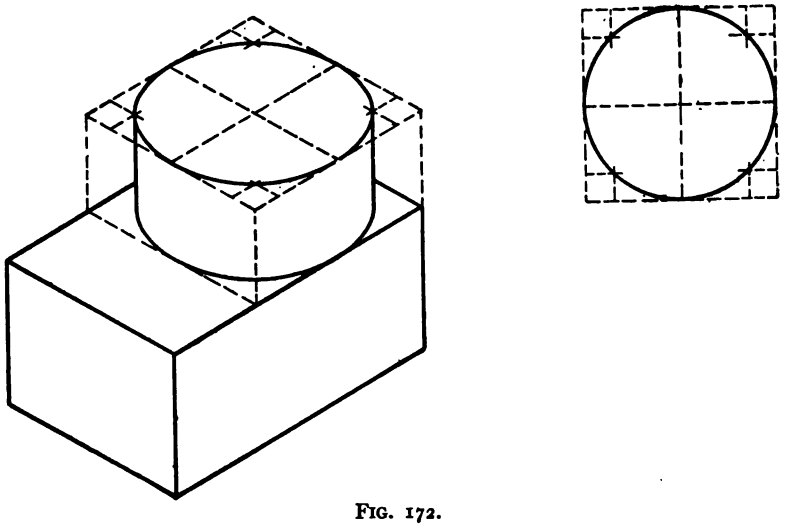

FIG. 172.

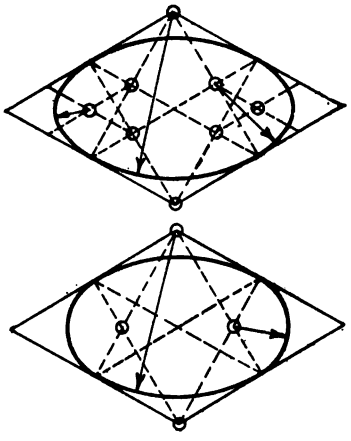

FIG. 173.

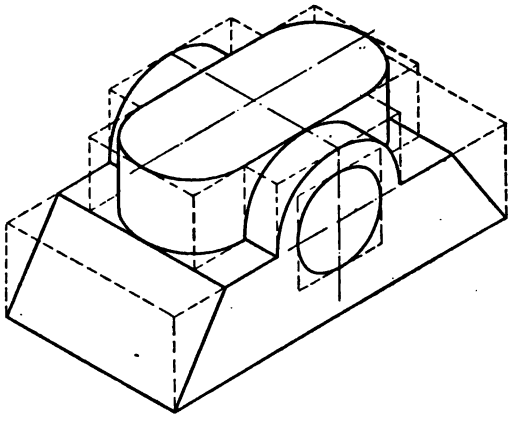

FIG. 174.

Oblique Projection

The basis of Oblique Projection is the assumption that one face of the object lies in the plane of projection and other lines are projected onto this plane by projection lines making an angle of 45° with the pro-

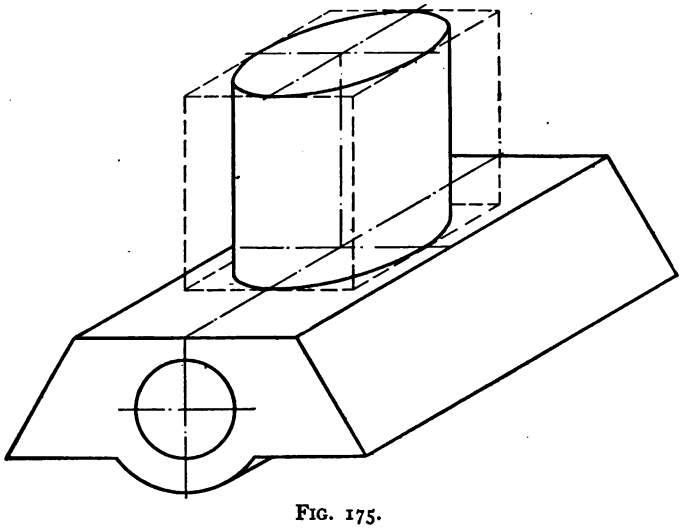

FIG. 175.

jection plane. Since the legs of a 45° × 90° triangle are equal all lines which are perpendicular to the plane of projection, as well as lines parallel to the plane of projection will be projected in their true length. Fig. 175 is an oblique projection of a small casting. Horizontal lines parallel

to the plane of projection are made horizontal on the drawing; lines parallel to the plane but not horizontal show the true angle with the horizontal and true length; lines perpendicular to the plane of projection may be drawn at any angle, usually 30°, with the horizontal. Other lines, curves, etc., not parallel to the plane of projection must be constructed by coördinates in a similar way to that suggested for isometric. The object should be so located that its longer axis is parallel to the plane of projection to avoid distortion unless there are more irregular outlines in planes parallel to the shorter axis. It is desirable to have irregular surfaces parallel to the plane of projection so that they will show in true size and shape.

Cabinet Drawing

The Cabinet Drawing is the same as Oblique Projection except that lines perpendicular to the plane of projection are drawn half their true length to reduce distortion. Lines perpendicular to the plane of projection are usually drawn at 45° with the horizontal instead of 30° as in the Oblique Projection.

APPENDIX

APPENDIX

SECTION LINING

While there is as yet no fixed standard, the following forms are in common use.

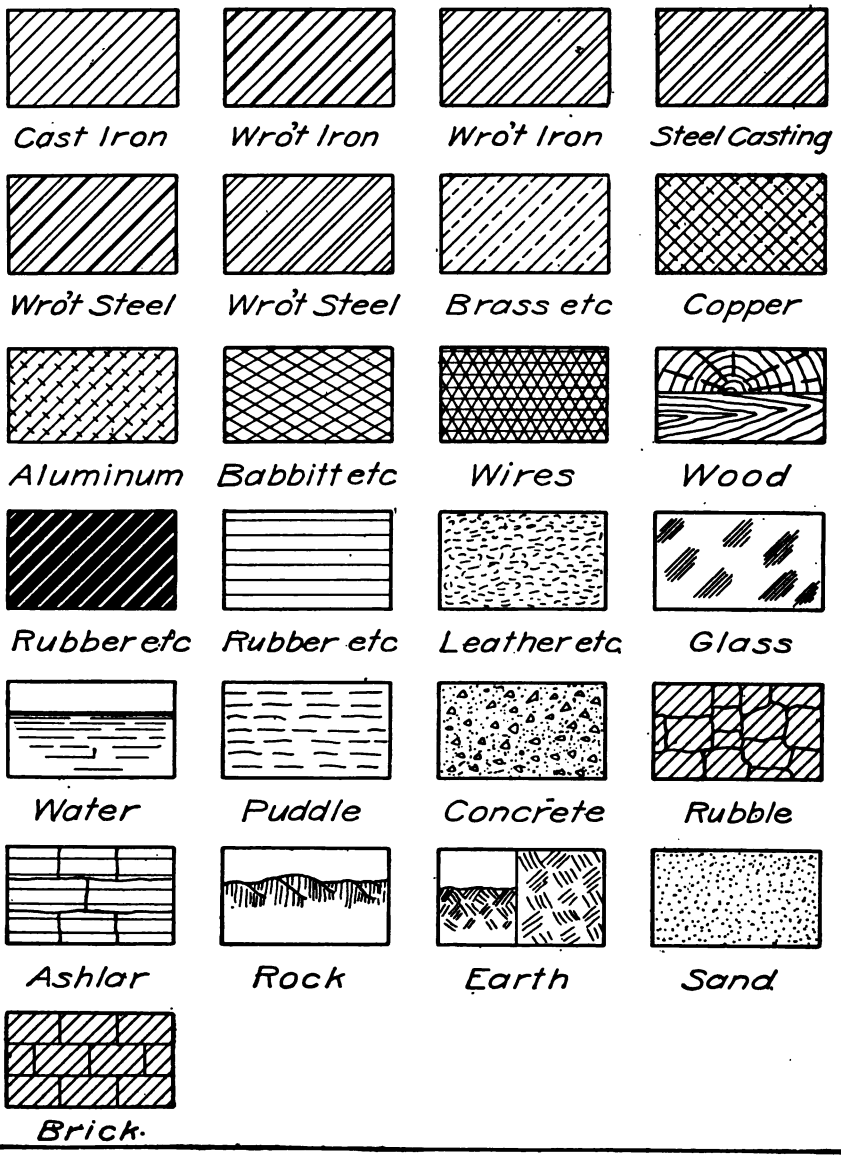

TABLE 1

U.S. OR SELLER'S ST'D BOLT HEADS AND NUTS

Hexagon — Chamfered and Cupped

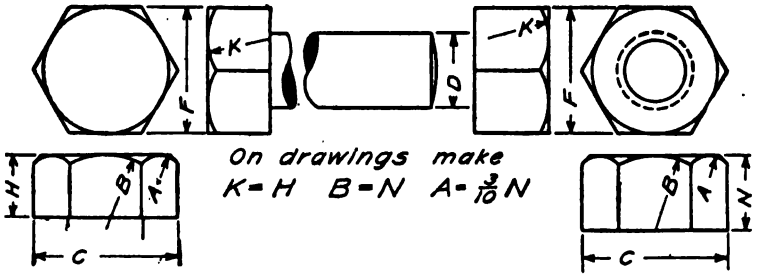

Dia. bolt D	Th. per inch.	Rough. F	Rough. C	Rough. H	Rough. N	Finished. F	Finished. C	Finished. H	Finished. N
1/4	20	1/2	27/64	1/4	1/4	7/16	1/2	1/8	1/8
5/16	18	19/32	11/16	19/64	5/16	17/32	29/64	1/4	1/4
3/8	16	11/16	21/32	11/32	3/8	5/8	29/32	5/16	5/16
7/16	14	25/32	29/32	25/64	7/16	29/32	53/64	3/8	3/8
1/2	13	7/8	1	7/16	1/2	1 1/16	1 5/16	7/16	7/16
9/16	12	31/32	1 1/8	31/64	9/16	1 3/32	1 1/64	1/2	1/2
5/8	11	1 1/16	1 7/32	17/32	5/8	1	1 5/32	9/16	9/16
3/4	10	1 1/4	1 7/16	5/8	3/4	1 3/16	1 21/64	11/16	11/16
7/8	9	1 7/16	1 21/32	23/32	7/8	1 3/8	1 19/32	13/16	13/16
1	8	1 5/8	1 7/8	13/16	1	1 9/16	1 13/16	15/16	15/16
1 1/8	7	1 13/16	2 3/32	29/32	1 1/8	1 3/4	2 1/64	1 1/16	1 1/16
1 1/4	7	2	2 5/16	1	1 1/4	1 15/16	2 15/64	1 5/16	1 5/16

U. S. St'd rough bolt heads and nuts have these proportions:—

$F = \frac{3}{2}D + \frac{1}{8}''$ $H = \frac{F}{2}$ $N = D$

Finished nuts are $\frac{1}{16}''$ less in width and thickness than the rough.

Finished heads same as finished nuts.

U. S. Gov't standard both rough and finished same as U. S. St'd rough.

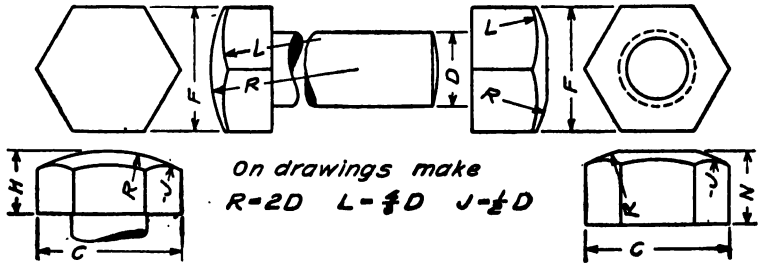

TABLE 2

U.S. OR SELLER'S ST'D BOLT HEADS AND NUTS

Square — Chamfered and Cupped

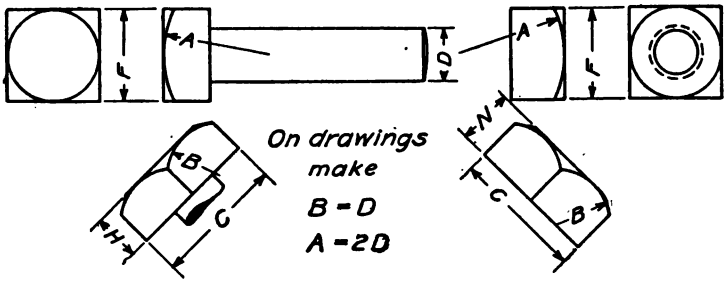

Dia. bolt D	Th. per inch.	Rough. F	Rough. C	Rough. H	Rough. N
1/4	20	1/2	23/32	1/4	1/4
5/16	18	19/32	27/32	19/64	5/16
3/8	16	11/16	31/32	11/32	3/8
7/16	14	25/32	1 7/64	25/64	7/16
1/2	13	7/8	1 1/4	7/16	1/2
9/16	12	31/32	1 3/8	31/64	9/16
5/8	11	1 1/16	1 1/2	17/32	5/8
3/4	10	1 1/4	1 25/32	5/8	3/4
7/8	9	1 7/16	2 1/32	23/32	7/8
1	8	1 5/8	2 19/64	13/16	1
1 1/8	7	1 13/16	2 9/16	29/32	1 1/8
1 1/4	7	2	2 53/64	1	1 1/4

U. S. St'd rough bolt heads and nuts have these proportions: —

$$F = \tfrac{1}{2}D + \tfrac{1}{8}''$$

$$H = \frac{F}{2}$$

$$N = D$$

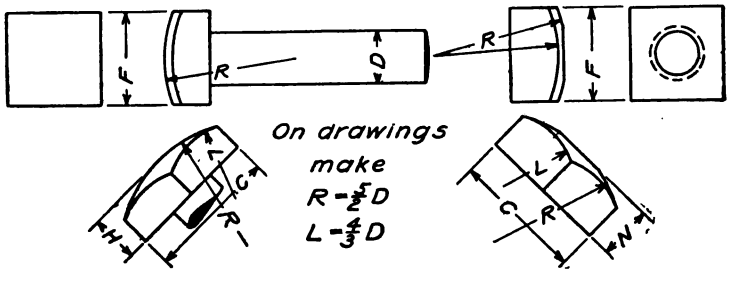

TABLE 3

MANUFACTURERS' ST'D BOLT HEADS

Wm. H. Haskell Mfg. Co.

Diameter of bolt.	Tap bolts, square, hexagon and coach screw heads.	Tee heads.	Square counters'k and round countersunk.	Round head.
	Width and thickness.	Length, width, and height.	Width and height.	Width and thickness.
1/4	7/16 × 5/16	1/2 × 1/4 × 5/16	1/2 × 5/16	11/16 × 5/32
5/16	1/2 × 1/4	5/8 × 5/16 × 1/4	19/32 × 5/16	7/8 × 5/16
3/8	5/8 × 9/32	3/4 × 3/8 × 5/16	11/16 × 7/32	15/16 × 1/4
7/16	23/32 × 11/32	7/8 × 7/16 × 3/8	25/32 × 1/4	1 × 9/32
1/2	13/16 × 3/8	1 × 1/2 × 7/16	7/8 × 1/4	1 5/16 × 11/32
9/16	15/16 × 7/16	1 1/8 × 9/16 × 1/2	29/32 × 9/32	1 5/16 × 3/8
5/8	1 × 1/2	1 1/4 × 5/8 × 17/32	1 1/16 × 5/16	1 3/8 × 7/16
3/4	1 5/16 × 5/8	1 1/2 × 3/4 × 5/8	1 1/4 × 11/32	1 5/8 × 1/2
7/8	1 3/8 × 3/4	1 3/4 × 7/8 × 3/4	1 7/16 × 13/32	2 × 1/2
1	1 9/16 × 13/16	2 × 1 × 7/8	1 5/8 × 7/16	2 1/4 × 5/8
1 1/8	1 13/16 × 1	.....	.....	.....
1 1/4	1 15/16 × 1 1/16	.....	.....	.....
1 3/8	2 1/8 × 1 5/16	.....	.....	.....
1 1/2	2 1/4 × 1 1/4	.....	.....	.....

The heads of Coach Screws and Tap Bolts will be made of same dimensions as given above for Square Head Bolts.

Unless otherwise ordered all Countersunk Head Bolts are made at an angle of 35°.

All Bolts are cut with United States Standard Threads, unless otherwise ordered.

TABLE 4

MANUFACTURERS' ST'D NUTS

Hexagon and Square

Wm. H. Haskell Mfg. Co.

Dia. bolt.	Rough.		Finished.		Dia. bolt.	Rough.		Finished.	
	Width.	Thickness.	Width.	Thickness.		Width.	Thickness.	Width.	Thickness.
1/4	1/2	1/4	1/2	1/4	7/8	1 1/2	7/8	1 7/16	7/8
5/16	5/8	5/16	1 9/32	5/16	7/8	1 1/2	1	.....	.....
3/8	3/4	3/8	1 11/16	3/8	7/8	1 5/8	7/8	.....	.....
7/16	7/8	7/16	1 25/32	7/16	7/8	1 5/8	1	.....	.....
1/2	7/8	1/2	7/8	1/2	1	1 3/4	1	1 5/8	1
1/2	1	1/2	.....	.....	1	1 3/4	1 1/8	.....	.....
1/2	1	9/16	.....	.....	1 1/8	2	1 1/4	1 13/16	1 1/8
9/16	1 1/8	9/16	1 1/32	9/16	1 1/4	2 1/4	1 3/8	2	1 1/4
5/8	1 1/8	5/8	1 1/16	5/8	1 3/8	2 1/2	1 1/2	2 1/16	1 3/8
5/8	1 1/8	3/4	.....	.....	1 1/2	2 3/4	1 5/8	2 3/8	1 1/2
5/8	1 1/4	5/8	.....	.....	1 5/8	3	1 3/4	2 9/16	1 5/8
5/8	1 1/4	3/4	.....	.....	1 3/4	3 1/4	1 7/8	2 3/4	1 3/4
3/4	1 3/8	3/4	1 1/4	3/4	1 7/8	3 1/2	2	2 15/16	1 7/8
3/4	1 3/8	7/8	.....	.....	2	3 1/2	2	3 1/8	2
3/4	1 1/2	3/4	.....	.....	2	3 1/2	2 1/8	.....	.....
3/4	1 1/2	7/8	.....	.....	.....	.....	.....	.....	.....

TABLE 5

HEX. CHECK AND JAM NUTS

Wm. H. Haskell Mfg. Co.

Dia. bolt.	Width.	Thickness.	Dia. bolt.	Width.	Thickness.	Dia. bolt.	Width.	Thickness.
1/4	1/2	1/8	3/4	1 1/4	3/8	1 1/2	2 3/8	7/8
5/16	1 9/32	1/8	7/8	1 7/16	1/2	1 5/8	2 9/16	1 5/16
3/8	1 11/16	1/4	1	1 5/8	1/2	1 3/4	2 3/4	1
7/16	1 25/32	1/4	1 1/8	1 13/16	5/8	1 7/8	2 15/16	1 1/16
1/2	7/8	1/4	1 1/4	2	3/4	2	3 1/8	1 1/8
5/8	1 1/16	5/16	1 3/8	2 5/16	13/16	.....	.....	.....

TABLE 6

CAP SCREWS

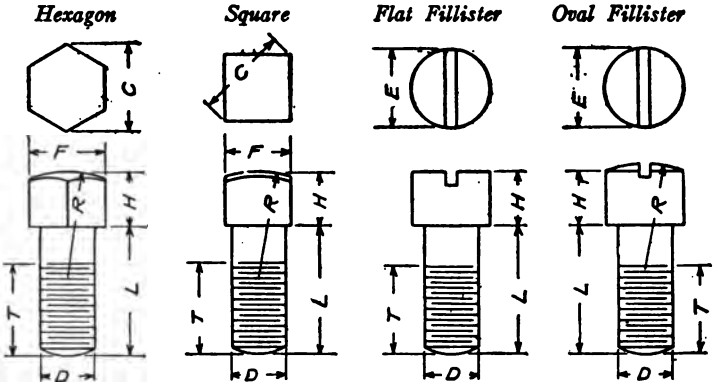

In all cases H = Diameter of screw. — Heads are U. S. Standard. On Hex. and Square T = $\frac{3}{4}$ L when L is under 4", — over 4" T = $\frac{1}{2}$ L

On Fillister T = $\frac{2}{3}$ L. — L varies by 4ths of an inch. On Drawings make R = 2 D, radius of point = D

Dia. screw	Hexagon.			Square.			Flat fillister. Oval fillister.	
D	*F*	*C*	*L*	*F*	*C*	*L*	*E*	*L*
$\frac{1}{8}$	.....	.....	.....	.....	.....	.....	$\frac{3}{16}$	$\frac{3}{4}$ to $2\frac{1}{2}$
$\frac{3}{16}$	.....	.....	.....	.....	.....	.....	$\frac{1}{4}$	$\frac{3}{4}$ to $2\frac{3}{4}$
$\frac{1}{4}$	$\frac{7}{16}$	$\frac{1}{2}$	$\frac{3}{4}$ to 3	$\frac{3}{8}$	$\frac{17}{32}$	$\frac{3}{4}$ to 3	$\frac{3}{8}$	$\frac{3}{4}$ to 3
$\frac{5}{16}$	$\frac{1}{2}$	$\frac{37}{64}$	$\frac{3}{4}$ to 3	$\frac{7}{16}$	$\frac{5}{8}$	$\frac{3}{4}$ to 3	$\frac{7}{16}$	$\frac{3}{4}$ to $3\frac{1}{4}$
$\frac{3}{8}$	$\frac{9}{16}$	$\frac{21}{32}$	$\frac{3}{4}$ to 3	$\frac{1}{2}$	$\frac{45}{64}$	$\frac{3}{4}$ to 3	$\frac{9}{16}$	$\frac{3}{4}$ to $3\frac{1}{2}$
$\frac{7}{16}$	$\frac{5}{8}$	$\frac{23}{32}$	$\frac{3}{4}$ to 4	$\frac{9}{16}$	$\frac{51}{64}$	$\frac{3}{4}$ to 4	$\frac{5}{8}$	$\frac{3}{4}$ to $3\frac{3}{4}$
$\frac{1}{2}$	$\frac{3}{4}$	$\frac{7}{8}$	$\frac{3}{4}$ to 4	$\frac{5}{8}$	$\frac{57}{64}$	$\frac{3}{4}$ to 4	$\frac{3}{4}$	$\frac{3}{4}$ to 4
$\frac{9}{16}$	$\frac{13}{16}$	$\frac{15}{16}$	1 to 4	$\frac{11}{16}$	$\frac{31}{32}$	1 to 4	$\frac{13}{16}$	1 to $4\frac{1}{4}$
$\frac{5}{8}$	$\frac{7}{8}$	$1\frac{1}{64}$	1 to $4\frac{1}{2}$	$\frac{3}{4}$	$1\frac{1}{16}$	1 to $4\frac{1}{2}$	$\frac{7}{8}$	$1\frac{1}{4}$ to $4\frac{1}{2}$
$\frac{3}{4}$	1	$1\frac{5}{32}$	$1\frac{1}{4}$ to $4\frac{3}{4}$	$\frac{7}{8}$	$1\frac{15}{64}$	$1\frac{1}{4}$ to $4\frac{3}{4}$	1	$1\frac{1}{2}$ to $4\frac{3}{4}$
$\frac{7}{8}$	$1\frac{1}{8}$	$1\frac{19}{64}$	$1\frac{1}{2}$ to 5	$1\frac{1}{8}$	$1\frac{19}{32}$	$1\frac{1}{2}$ to 5	$1\frac{1}{8}$	$1\frac{3}{4}$ to 5
1	$1\frac{1}{4}$	$1\frac{7}{16}$	$1\frac{3}{4}$ to 5	$1\frac{1}{4}$	$1\frac{49}{64}$	$1\frac{3}{4}$ to 5	$1\frac{1}{4}$	2 to 5
$1\frac{1}{8}$	$1\frac{3}{8}$	$1\frac{19}{32}$	2 to 5	$1\frac{3}{8}$	$1\frac{15}{16}$	2 to 5	.....	.....
$1\frac{1}{4}$	$1\frac{1}{2}$	$1\frac{47}{64}$	2 to 5	$1\frac{1}{2}$	$2\frac{1}{8}$	2 to 5	.....	.....

TABLE 7

CAP SCREWS

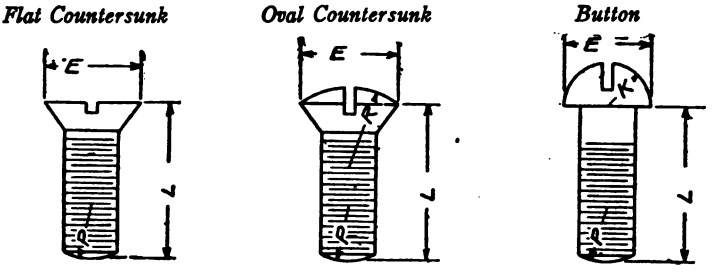

Threads are U. S. Standard. Angle of head commonly 72°. On drawings make R = ⅛ Diameter of screw, K = ½ E, P = Diameter.

Dia. screw.	C'sunk.		Button.		Dia. screw.	C'sunk.		Button.	
	E	*L*	*E*	*L*		*E*	*L*	*E*	*L*
⅛	¼	¾ to 1¾	7/32	⅜ to 1¾	7/16	13/16	1 to 3	¾	¾ to 3
5/16	⅜	¾ to 2	5/16	⅜ to 2	½	⅞	1¼ to 3	13/16	1 to 3
¼	15/32	¾ to 2¼	7/16	¾ to 2¼	9/16	1	1½ to 3	15/16	1¼ to 3
5/16	⅝	¾ to 2¾	9/16	¾ to 2½	⅝	1⅛	1¾ to 3	1	1½ to 3
⅜	¾	¾ to 3	⅝	¾ to 2¾	¾	1⅜	2 to 3	1¼	1¾ to 3

TABLE 8

SET SCREWS

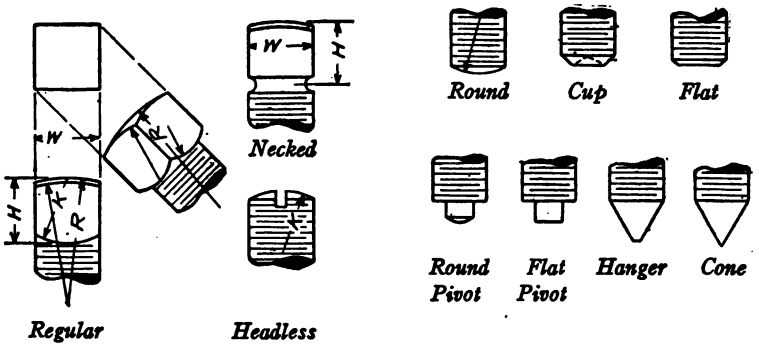

H = W = Diameter of screw. On drawings make R = 2 D. Threads are U. S. Standard.

TABLE 9

STANDARD MACHINE SCREWS

American Screw Company

Flat Head

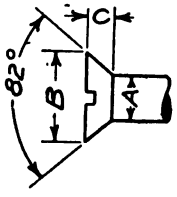

Round Head

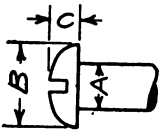

Fillister Head

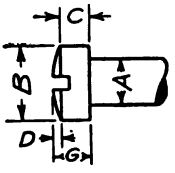

No.	Dia. *A*	Threads per inch.	Flat head.		Round head.		Fillister head.			
			B	*C*	*B*	*C*	*B*	*C*	*D*	G
2	.0842	64–56–48	.1631	.0454	.1544	.0672	.1350	.0549	.0126	.0675
3	.0973	56–48	.1894	.0530	.1786	.0746	.1561	.0634	.0146	.0880
4	.1105	40–36–32	.2158	.0605	.2028	.0820	.1772	.0720	.0166	.0886
5	.1236	40–36–32	.2421	.0681	.2270	.0894	.1984	.0806	.0186	.0992
6	.1368	36–32–30	.2684	.0757	.2512	.0968	.2195	.0892	.0205	.1097
7	.1500	32–30	.2947	.0832	.2754	.1042	.2406	.0978	.0225	.1203
8	.1631	36–32–30	.3210	.0908	.2996	.1116	.2617	.1063	.0245	.1308
9	.1763	32–30–24	.3474	.0984	.3238	.1190	.2828	.1149	.0265	.1414
10	.1894	32–30–24	.3737	.1059	.3480	.1264	.3040	.1235	.0285	.1520
12	.2158	24–20	.4263	.1210	.3922	.1412	.3462	.1407	.0324	.1731
14	.2421	24–20–18	.4790	.1362	.4364	.1560	.3884	.1578	.0364	.1942
16	.2684	20–18–16	.5316	.1513	.4806	.1708	.4307	.1750	.0403	.2153
18	.2947	20–18–16	.5842	.1665	.5248	.1856	.4729	.1921	.0443	.2364
20	.3210	18–16	.6368	.1816	.5690	.2004	.5152	.2093	.0483	.2576
22	.3474	18–16	.6895	.1967	.6106	.2152	.5574	.2267	.0520	.2787
24	.3737	18–16–14	.7421	.2118	.6522	.2300	.5996	.2436	.0562	.2998
26	.4000	16–14	.7421	.1967	.6938	.2448	.6419	.2608	.0601	.3209
28	.4263	16–14	.7948	.2118	.7354	.2596	.6841	.2779	.0641	.3420
30	.4526	16–14	.8474	.2270	.7770	.2744	.7264	.2951	.0681	.3632

TABLE 10

S.A.E. SCREWS AND NUTS

From Chicago Screw Company

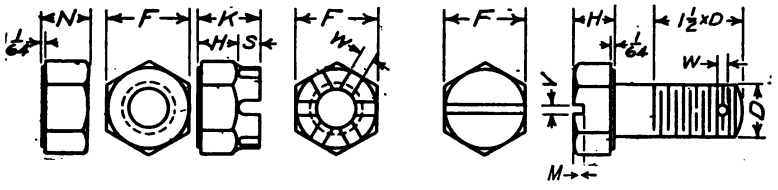

$N = \frac{1}{2}$ Nom. Dia. $H = \frac{1}{2}$ Nom. Dia. $K = H +$ Depth of Slot.

Size (nom. dia.).	Threads per inch.	*F*	*N*	*K*	*S*	*W*	*H*	*M*	*V*	Diam. cotter.
1/4	28	7/16	7/32	9/32	3/32	5/64	1/8	3/32	1/16	1/16
5/16	24	1/2	17/64	21/64	3/32	5/64	15/64	7/64	1/16	1/16
3/8	24	9/16	21/64	13/32	1/8	1/8	9/32	1/8	3/32	3/32
7/16	20	5/8	3/8	29/64	1/8	1/8	21/64	1/8	3/32	3/32
1/2	20	3/4	7/16	9/16	1/8	1/8	3/8	1/8	3/32	3/32
9/16	18	7/8	31/64	39/64	1/8	5/32	27/64	1/8	3/32	1/8
5/8	18	15/16	35/64	23/32	1/4	5/32	15/32	1/8	3/32	1/8
11/16	16	1	19/32	43/64	1/4	5/32	33/64	1/8	3/32	1/8
3/4	16	1 1/16	21/32	13/16	1/4	5/32	1/2	1/8	3/32	1/8
7/8	14	1 1/4	43/64	29/32	1/4	5/32	21/32	1/8	3/32	1/8
1	14	1 7/16	7/8	1	1/4	5/32	3/4	1/8	3/32	1/8
1 1/8	12	1 5/8	63/64	1 5/32	5/16	7/32	27/32	7/32	5/32	11/64
1 1/4	12	1 13/16	1 3/32	1 1/4	5/16	7/32	15/16	7/32	5/32	11/64
1 3/8	12	2	1 13/64	1 13/32	3/8	1/4	1 1/32	1/4	1/8	13/64
1 1/2	12	2 1/16	1 5/16	1 1/2	3/8	1/4	1 1/8	1/4	1/8	13/64

TABLE 11

U.S. STANDARD SCREW THREADS

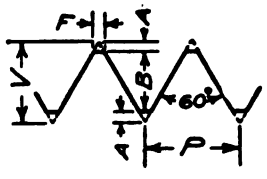

$$A = \frac{V}{8} \qquad F = \frac{P}{8}$$

$$B = \frac{3}{4}V = \frac{5}{8}P \text{ (nearly)}$$

Dia. screw.	Threads per in.	Dia. screw.	Threads per in.	Dia. screw.	Threads per in.	Dia. screw.	Threads per in.	Dia. screw.	Threads per in.
1/4	20	5/8	10	1 1/2	6	3	3 1/2	5	2 1/2
5/16	18	11/16	10	1 5/8	5 1/2	3 1/4	3 1/2	5 1/4	2 1/2
3/8	16	7/8	9	1 3/4	5	3 1/2	3 1/4	5 1/2	2 1/2
7/16	14	15/16	9	1 7/8	5	3 3/4	3	5 3/4	2 3/4
1/2	13	1	8	2	4 1/2	4	3	6	2 1/4
9/16	12	1 1/8	7	2 1/4	4 1/2	4 1/4	2 7/8	.....	.....
5/8	11	1 1/4	7	2 1/2	4	4 1/2	2 3/4	.....	.....
11/16	11	1 3/8	6	2 3/4	4	4 3/4	2 3/4	.....	.....

TABLE 12

WHITWORTH OR ENGLISH S'T'D SCREW THREADS

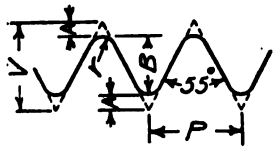

$$A = \frac{V}{6} = .16\,P$$

$$B = .64\,P \qquad r = .137\,P$$

Dia. screw.	Threads per in.	Dia. screw.	Threads per in.	Dia. screw.	Threads per in.	Dia. screw.	Threads per in.	Dia. screw.	Threads per in.
1/4	20	5/8	11	1	8	1 3/4	5	3	3 1/2
5/16	18	11/16	11	1 1/8	7	1 7/8	4 1/2	3 1/4	3 1/2
3/8	16	3/4	10	1 1/4	7	2	4 1/2	3 1/2	3 1/2
7/16	14	13/16	10	1 3/8	6	2 1/4	4	3 3/4	3
1/2	12	7/8	9	1 1/2	6	2 1/2	4	4	3
9/16	12	15/16	9	1 5/8	5	2 3/4	3 1/2	.....	.....

TABLE 13
ACME THREADS

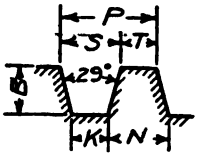

Threads.	B	T	K	S	N	Threads.	B	T	K	S	N
16	.048	.023	.018	.039	.044	1 3/5	.323	.232	.226	.393	.399
10	.060	.037	.032	.063	.068	1 1/2	.343	.247	.242	.419	.425
9	.066	.041	.036	.070	.075	1 5/11	.354	.255	.250	.433	.438
8	.073	.046	.041	.079	.084	1 3/8	.385	.278	.273	.472	.477
7	.081	.053	.048	.090	.095	1 5/13	.416	.301	.296	.511	.516
6	.093	.062	.057	.105	.110	1 1/7	.448	.324	.319	.551	.556
5 1/2	.104	.070	.064	.118	.123	1 1/15	.479	.348	.342	.590	.595
5	.110	.074	.070	.126	.131	1	.510	.371	.366	.629	.635
4 1/2	.121	.082	.077	.140	.145	15/17	.541	.394	.389	.669	.674
4	.135	.093	.088	.157	.163	7/8	.573	.417	.412	.708	.713
3 1/2	.153	.106	.101	.180	.185	13/15	.604	.440	.435	.747	.753
3 1/3	.166	.116	.111	.197	.202	3/4	.635	.463	.458	.787	.792
3	.177	.124	.118	.210	.215	11/15	.666	.487	.481	.826	.831
2 3/4	.198	.139	.134	.236	.241	5/11	.698	.510	.505	.865	.870
2 1/2	.210	.148	.143	.252	.257	13/15	.729	.533	.528	.905	.910
2 2/7	.229	.162	.157	.275	.280	2/3	.760	.556	.551	.944	.949
2	.260	.185	.180	.315	.320	1 5/8	.823	.603	.597	1.023	1.028
1 7/8	.291	.209	.203	.354	.359	4/7	.885	.649	.644	1.101	1.106
.....	.....	.....	.....	.....	.....	1 7/8	.948	.695	.690	1.180	1.185
.....	.....	.....	.....	.....	.....	1/2	1.010	.741	.736	1.259	1.264

SQUARE THREADS

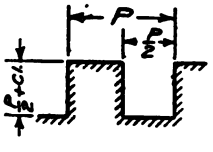

Threads per inch may be about 3/4 of the U. S. Standard on both Acme and Square.

TABLE 14

PUNCHED WASHERS

Manufacturers' Standard

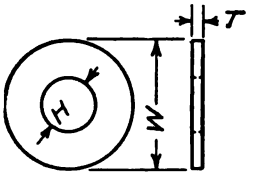

Bolt.	H	W	Thickness.		Bolt.	H	W	Thickness.	
			Gauge.	Inches.				Gauge.	Inches.
5/16	1/4	9/16	18	3/64	1 1/8	1 1/4	2 1/4	8	11/64
1/4	5/16	3/4	16	1/16	1 1/4	1 3/8	3	8	11/64
5/16	3/8	7/8	16	1/16	1 3/8	1 1/2	3 1/4	7	5/16
3/8	7/16	1	14	5/64	1 1/2	1 5/8	3 1/2	7	5/16
7/16	1/2	1 1/4	14	5/64	1 5/8	1 3/4	3 3/4	7	5/16
1/2	9/16	1 3/8	12	3/32	1 3/4	1 7/8	4	7	5/16
9/16	5/8	1 1/2	12	3/32	1 7/8	2	4 1/4	7	5/16
5/8	11/16	1 3/4	10	1/8	2	2 1/8	4 1/2	7	5/16
3/4	13/16	2	9	7/32	2 1/4	2 3/8	4 3/4	5	7/32
7/8	15/16	2 1/4	8	11/64	2 1/2	2 5/8	5	4	11/64
1	1 1/16	2 1/2	8	11/64	.....	.....	.....	.....	.....

TABLE 15

SPLIT COTTER PINS

See also S.A.E. Bolts and Nuts

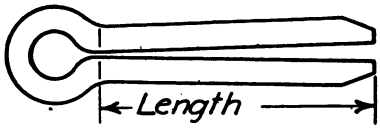

Dia. gauge.....	13	12	11	10	9	8	7	6	5	4	1	....	....	....	...
Dia. approximate...	3/32	7/64	1/8	9/64	5/32	11/64	3/16	13/64	7/32	1/4	5/16	3/8	7/16	1/2	5/8
Drill size.....	30	28	24	19	15	9	1	1/4	17/64	13/64	23/64	27/64	1/2	9/16	11/16
Lengths.....	1/2–2	1/2–2	1/2–2 1/2	1/2–2 1/2	1/2–2 1/2	1/2–2 1/2	3/4–2 3/4	3/4–2 3/4	1–3	1–4	1–4	1 1/2–4	1 3/4–5	2–6	3–6

Lengths under 4" vary by 1/2"; over 4" by 1"

TABLE 16

TAPER PINS

Pratt & Whitney Standard

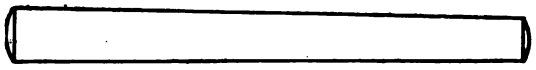

Taper $\frac{1}{4}$" per foot.

Size (number)	000000	00000	0000	000	00	0	1	2
Dia., large end	.0715	.092	.108	.125	.147	.156	.172	.193
Approximate dia	$\frac{5}{64}$	$\frac{3}{32}$	$\frac{7}{64}$	$\frac{1}{8}$	$\frac{9}{64}$	$\frac{5}{32}$	$\frac{11}{64}$	$\frac{3}{16}$
Greatest length	$\frac{5}{8}$	$\frac{5}{8}$	$\frac{3}{4}$	$\frac{3}{4}$	1	1	$1\frac{1}{4}$	$1\frac{1}{2}$

Size (number)	3	4	5	6	7	8	9	10
Dia., large end	.219	.250	.289	.341	.409	.492	.591	.706
Approximate dia	$\frac{7}{32}$	$\frac{1}{4}$	$\frac{19}{64}$	$\frac{11}{32}$	$\frac{13}{32}$	$\frac{1}{2}$	$\frac{19}{32}$	$\frac{23}{32}$
Greatest length	$1\frac{3}{4}$	2	$2\frac{1}{4}$	$3\frac{1}{4}$	$3\frac{3}{4}$	$4\frac{1}{2}$	$5\frac{1}{4}$	6

TABLE 17

JARNO TAPERS

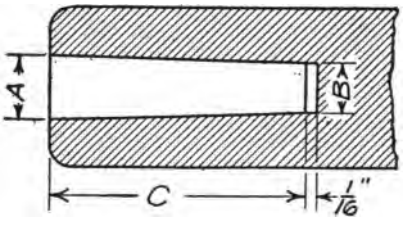

Taper 1 in 20 = .6" per foot = .05" per inch. A = No. of Taper ÷ 8. B = No. of Taper ÷ 10. C = No. of Taper ÷ 2.

No.	A	B	C	No.	A	B	C	No.	A	B	C
2	.250	.20	1	9	1.125	.90	$4\frac{1}{2}$	16	2.000	1.60	8
3	.375	.30	$1\frac{1}{2}$	10	1.250	1.00	5	17	2.125	1.70	$8\frac{1}{2}$
4	.500	.40	2	11	1.375	1.10	$5\frac{1}{2}$	18	2.250	1.80	9
5	.625	.50	$2\frac{1}{2}$	12	1.500	1.20	6	19	2.375	1.90	$9\frac{1}{2}$
6	.750	.60	3	13	1.625	1.30	$6\frac{1}{2}$	20	2.500	2.00	10
7	.875	.70	$3\frac{1}{2}$	14	1.750	1.40	7	.....	.....	.....	.....
8	1.000	.80	4	15	1.875	1.50	$7\frac{1}{2}$	.....	.....	.....	.....

TABLE 18

BROWN AND SHARPE TAPERS

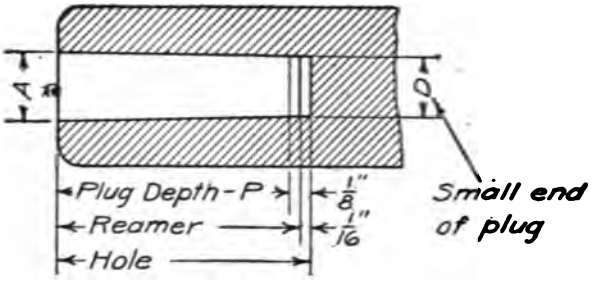

Taper $\frac{1}{2}$ " per foot except No. 10 which is .5161

No.	A	D	P	No.	A	D	P	No.	A	D	P
1	.239	.200	$1\frac{5}{16}$	6	.599	.500	$2\frac{3}{8}$	10	1.260	1.0446	5
2	.299	.250	$1\frac{9}{16}$	6	.635	.500	$3\frac{1}{4}$	10	1.289	1.0446	$5\frac{11}{16}$
3	.385	.312	$1\frac{7}{8}$	7	.725	.600	3	10	1.312	1.0446	$6\frac{7}{32}$
3	.395	.312	2	7	.766	.600	4	11	1.531	1.250	$6\frac{3}{4}$
4	.402	.350	$1\frac{1}{4}$	8	.898	.750	$3\frac{9}{16}$	12	1.796	1.500	$7\frac{1}{8}$
5	.523	.450	$1\frac{3}{4}$	9	1.066	.900	4	.....	.....	.....	.....

TABLE 19

MORSE TAPERS

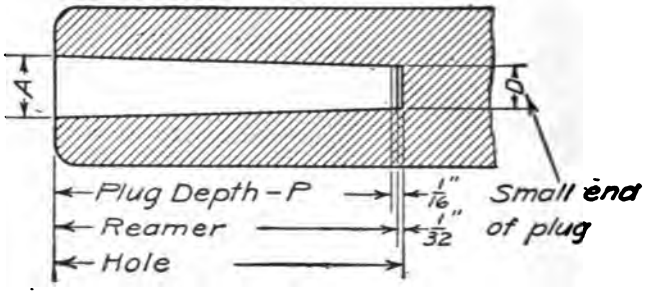

No.	A	D	P	No.	A	D	P	No.	A	D	P
0	.356	.252	2	3	.938	.778	$3\frac{3}{16}$	6	2.494	2.116	$7\frac{1}{4}$
1	.475	.369	$2\frac{1}{8}$	4	1.231	1.020	$4\frac{1}{16}$	7	3.270	2.750	10
2	.700	.572	$2\frac{9}{16}$	5	1.748	1.475	$5\frac{3}{16}$	.....	.....	.....	.....

TABLE 20

KEYS FOR SHAFTING

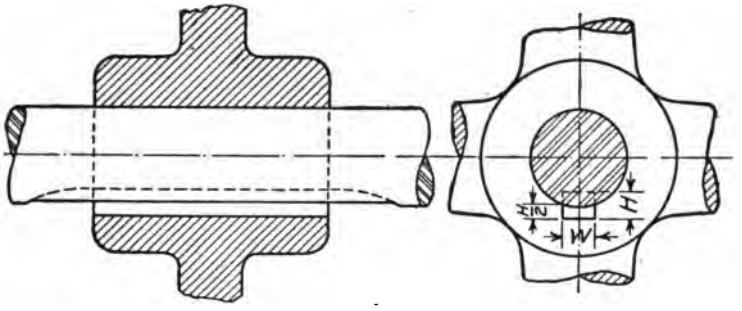

Dia. shaft	$1\frac{1}{4}$	$1\frac{1}{2}$	$1\frac{3}{4}$	2	$2\frac{1}{4}$	$2\frac{1}{2}$	$2\frac{3}{4}$	3	$3\frac{1}{2}$	4
Depth — H	$\frac{5}{16}$	$\frac{5}{16}$	$\frac{5}{16}$	$\frac{7}{16}$	$\frac{7}{16}$	$\frac{9}{16}$	$\frac{11}{16}$	$\frac{11}{16}$	$\frac{11}{16}$	$\frac{13}{16}$
Width — W	$\frac{3}{8}$	$\frac{3}{8}$	$\frac{3}{8}$	$\frac{1}{2}$	$\frac{1}{2}$	$\frac{5}{8}$	$\frac{3}{4}$	$\frac{3}{4}$	$\frac{3}{4}$	$\frac{7}{8}$
Dia. shaft	$4\frac{1}{2}$	5	$5\frac{1}{2}$	6	$6\frac{1}{2}$	7	$7\frac{1}{2}$	8	$8\frac{1}{2}$	9
Depth — H	$\frac{13}{16}$	$\frac{13}{16}$	$\frac{15}{16}$	$\frac{15}{16}$	$\frac{15}{16}$	$1\frac{1}{16}$	$1\frac{1}{16}$	$1\frac{1}{16}$	$1\frac{1}{16}$	$1\frac{1}{16}$
Width — W	$\frac{7}{8}$	$\frac{7}{8}$	1	1	1	$1\frac{1}{8}$	$1\frac{1}{8}$	$1\frac{1}{8}$	$1\frac{1}{8}$	$1\frac{1}{8}$

TABLE 21

KEYS FOR MACHINE TOOLS

Dia. shaft	Under 1	1 to $1\frac{3}{16}$	$1\frac{1}{4}$ to $1\frac{7}{16}$	$1\frac{1}{2}$ to $1\frac{11}{16}$	$1\frac{3}{4}$ to $2\frac{3}{16}$
Size of key	$\frac{1}{8} \times \frac{1}{8}$	$\frac{3}{16} \times \frac{3}{16}$	$\frac{1}{4} \times \frac{1}{4}$	$\frac{5}{16} \times \frac{5}{16}$	$\frac{7}{16} \times \frac{7}{16}$
Dia. shaft	$2\frac{1}{4}$ to $2\frac{11}{16}$	$2\frac{3}{4}$ to $3\frac{15}{16}$	4 to $5\frac{7}{16}$	$5\frac{1}{2}$ to $6\frac{15}{16}$	7 to $8\frac{15}{16}$
Size of key	$\frac{9}{16} \times \frac{9}{16}$	$\frac{11}{16} \times \frac{11}{16}$	$\frac{13}{16} \times \frac{13}{16}$	$\frac{15}{16} \times \frac{15}{16}$	$1\frac{1}{16} \times 1\frac{1}{16}$

TABLE 22
WHITNEY KEYS
Woodruff System—Small Sizes

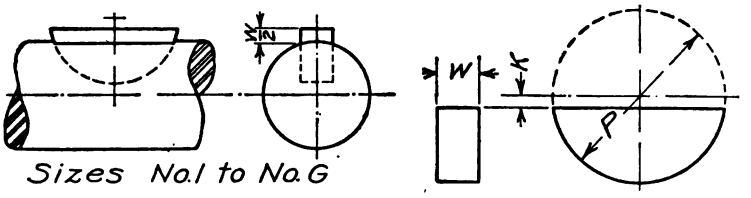

No.	1	2	3	4	5	6	7	8	9	10	11	12	A	13	14	15
P	1/2	1/2	1/2	5/8	5/8	5/8	3/4	3/4	3/4	7/8	7/8	7/8	7/8	1	1	1
K	3/64	3/64	3/64	1/16	1/16	1/16	1/16	1/16	1/16	1/16	1/16	1/16	1/16	1/16	1/16	1/16
W	1/16	3/32	1/8	3/32	1/8	5/32	1/8	5/32	3/16	5/32	3/16	7/32	1/4	3/16	7/32	1/4

No.	*B*	16	17	18	*C*	19	20	21	*D*	*E*	22	23	*F*	24	25	*G*
P	1	1 1/8	1 1/8	1 1/8	1 1/8	1 1/4	1 1/4	1 1/4	1 1/4	1 1/4	1 3/8	1 3/8	1 3/8	1 1/2	1 1/2	1 1/2
K	1/16	5/64	5/64	5/64	5/64	5/64	5/64	5/64	5/64	5/64	3/32	3/32	3/32	7/64	7/64	7/64
W	5/16	3/16	7/32	1/4	5/16	3/16	7/32	1/4	5/16	3/8	1/4	5/16	3/8	1/4	5/16	3/8

TABLE 23
WHITNEY KEYS
Woodruff System—Large Sizes

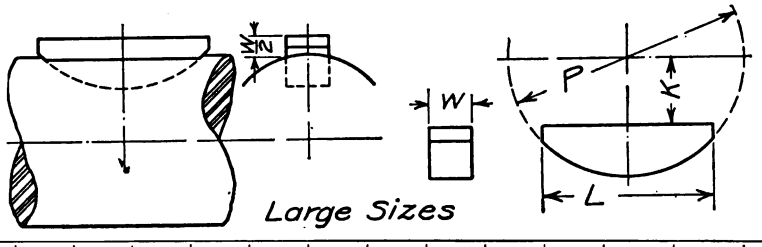

No.	126	127	128	129	26	27	28	29	*Rx*	*Sx*	*Tx*	*Ux*	*Vx*
P	2 1/8	2 1/8	2 1/8	2 1/8	2 1/8	2 1/8	2 1/8	2 1/8	2 3/4	2 3/4	2 3/4	2 3/4	2 3/4
K	21/32	21/32	21/32	21/32	11/32	17/32	17/32	17/32	25/32	25/32	25/32	25/32	25/32
L	1 3/8	1 3/8	1 3/8	1 3/8	1 23/32	1 23/32	1 23/32	1 23/32	2	2	2	2	2
W	3/16	1/4	5/16	3/8	3/16	1/4	5/16	3/8	1/4	5/16	3/8	7/16	1/2

No.	*R*	*S*	*T*	*U*	*V*	30	31	32	33	34	35	36	
P	2 3/4	2 3/4	2 3/4	2 3/4	2 3/4	3 1/2	3 1/2	3 1/2	3 1/2	3 1/2	3 1/2	3 1/2	.....
K	5/8	5/8	5/8	5/8	5/8	13/16	13/16	13/16	13/16	13/16	13/16	13/16	.....
L	2 5/16	2 5/16	2 5/16	2 5/16	2 5/16	2 7/8	2 7/8	2 7/8	2 7/8	2 7/8	2 7/8	2 7/8	.....
W	1/4	5/16	3/8	7/16	1/2	3/8	7/16	1/2	9/16	5/8	11/16	3/4	.....

TABLE 24

STANDARD GAUGES IN DECIMALS OF AN INCH

No. of gauge.	Birmingham or Stubs' Iron	Brown and Sharpe.	U. S. St'd Plate Iron & Steel.	British Imperial.	American Steel & Wire Co.	Stubs' Steel Wire.
0000000	.....	.....	.500	.500	.....	.....
000000	.....	.....	.46875	.464	.....	.....
00000	.....	.....	.4375	.432	.....	.....
0000	.454	.46	.40625	.400	.3938	.....
000	.425	.40964	.375	.372	.3625	.....
00	.380	.3648	.34375	.348	.3310	.....
0	.340	.32486	.3125	.324	.3065	.....
1	.300	.2893	.28125	.300	.2830	.227
2	.284	.25763	.265625	.276	.2625	.219
3	.259	.22942	.25	.252	.2437	.212
4	.238	.20431	.234375	.232	.2253	.207
5	.220	.18194	.21875	.212	.2070	.204
6	.203	.16202	.203125	.192	.1920	.201
7	.180	.14428	.1875	.176	.1770	.199
8	.165	.12849	.171875	.160	.1620	.197
9	.148	.11443	.15625	.144	.1483	.194
10	.134	.10189	.140625	.128	.1350	.191
11	.120	.090742	.125	.116	.1205	.188
12	.109	.080808	.109375	.104	.1055	.185
13	.095	.071961	.09375	.092	.0915	.182
14	.083	.064084	.078125	.080	.0800	.180
15	.072	.057068	.070313	.072	.0720	.178
16	.065	.05082	.0625	.064	.0625	.175
17	.058	.045257	.05625	.056	.0540	.172
18	.049	.040303	.05	.048	.0475	.168
19	.042	.03589	.04375	.040	.0410	.164
20	.035	.031961	.0375	.036	.0348	.161
21	.032	.028462	.034375	.032	.0318	.157
22	.028	.025347	.03125	.028	.0286	.155
23	.025	.022571	.028125	.024	.0258	.153
24	.022	.0201	.025	.022	.0230	.151
25	.020	.0179	.021875	.020	.0204	.148
26	.018	.01594	.01875	.018	.0181	.146
27	.016	.014195	.017188	.0164	.0173	.143
28	.014	.012641	.015625	.0148	.0162	.139
29	.013	.011257	.014063	.0136	.0150	.134
30	.012	.010025	.0125	.0124	.0140	.127
31	.010	.008928	.010938	.0116	.0132	.120
32	.009	.00795	.010156	.0108	.0128	.115
33	.008	.00708	.009375	.0100	.0118	.112
34	.007	.006304	.008594	.0092	.0104	.110
35	.005	.005614	.007813	.0084	.0095	.108
36	.004	.005	.007031	.0076	.0090	.106
37	.....	.004453	.006641	.0068	.....	.103
38	.....	.003965	.00625	.0060	.....	.101
39	.....	.003531	.....	.....	.....	.099
40	.....	.003144	.....	.....	.....	.097

TABLE 25

STUBS' STEEL WIRE GAUGE

No.	Dia. (inch.)	No.	Dia. (inch.)	No.	Dia. (inch.)	No.	Dia. (inch.)	No.	Dia. (inch.)	No.	Dia. (inch.)
Z	.413	*P*	.323	*F*	.257	51	.066	61	.038	71	.026
Y	.404	*O*	.316	*E*	.250	52	.063	62	.037	72	.024
X	.397	*N*	.302	*D*	.246	53	.058	63	.036	73	.023
W	.386	*M*	.295	*C*	.242	54	.055	64	.035	74	.022
V	.377	*L*	.290	*B*	.238	55	.050	65	.033	75	.020
U	.368	*K*	.281	*A*	.234	56	.045	66	.032	76	.018
T	.358	*J*	.277	1	[See Table 24]	57	.042	67	.031	77	.016
S	.348	*I*	.272	to		58	.041	68	.030	78	.015
R	.339	*H*	.266	50		59	.040	69	.029	79	.014
Q	.332	*G*	.261	.....	.....	60	.039	70	.027	80	.013

TABLE 26

MORSE TWIST DRILL & STEEL WIRE GAUGE

Sizes *Z* to *A* are the same as Stubs'. — See Table 25

No.	Dia. (inch.)	No.	Dia. (inch.)	No.	Dia. (inch.)	No.	Dia. (inch.)	No.	Dia. (inch.)	No.	Dia. (inch.)
1	.2280	11	.1910	21	.1590	31	.1200	41	.0960	51	.0670
2	.2210	12	.1890	22	.1570	32	.1160	42	.0935	52	.0635
3	.2130	13	.1850	23	.1540	33	.1130	43	.0890	53	.0595
4	.2090	14	.1820	24	.1520	34	.1110	44	.0860	54	.0550
5	.2055	15	.1800	25	.1495	35	.1100	45	.0820	55	.0520
6	.2040	16	.1770	26	.1470	36	.1065	46	.0810	56	.0465
7	.2010	17	.1730	27	.1440	37	.1040	47	.0785	57	.0430
8	.1990	18	.1695	28	.1405	38	.1015	48	.0760	58	.0420
9	.1960	19	.1660	29	.1360	39	.0995	49	.0730	59	.0410
10	.1935	20	.1610	30	.1285	40	.0980	50	.0700	60	.0400

TABLE 27

DECIMAL EQUIVALENTS

Fractions of an Inch

.....	.....	1/64	.015625	.....	.....	33/64	.515625
.....	1/32	.....	.03125	.....	17/32	.....	.53125
.....	.....	3/64	.046875	.....	.....	35/64	.546875
1/16	.....	.....	.0625	9/16	.....	.....	.5625
.....	.....	5/64	.078125	.....	.....	37/64	.578125
.....	3/32	.....	.09375	.....	19/32	.....	.59375
.....	.....	7/64	.109375	.....	.....	39/64	.609375
1/8	.....	.....	.125	5/8	.....	.....	.625
.....	.....	9/64	.140625	.....	.....	41/64	.640625
.....	5/32	.....	.15625	.....	21/32	.....	.65625
.....	.....	11/64	.171875	.....	.....	43/64	.671875
3/16	.....	.....	.1875	11/16	.....	.....	.6875
.....	.....	13/64	.203125	.....	.....	45/64	.703125
.....	7/32	.....	.21875	.....	23/32	.....	.71875
.....	.....	15/64	.234375	.....	.....	47/64	.734375
1/4	.....	.....	.25	3/4	.....	.....	.75
.....	.....	17/64	.265625	.....	.....	49/64	.765625
.....	9/32	.....	.28125	.....	25/32	.....	.78125
.....	.....	19/64	.296875	.....	.....	51/64	.796875
5/16	.....	.....	.3125	13/16	.....	.....	.8125
.....	.....	21/64	.328125	.....	.....	53/64	.828125
.....	11/32	.....	.34375	.....	27/32	.....	.84375
.....	.....	23/64	.359375	.....	.....	55/64	.859375
3/8	.....	.....	.375	7/8	.....	.....	.875
.....	.....	25/64	.390625	.....	.....	57/64	.890625
.....	13/32	.....	.40625	.....	29/32	.....	.90625
.....	.....	27/64	.421875	.....	.....	59/64	.921875
7/16	.....	.....	.4375	15/16	.....	.....	.9375
.....	.....	29/64	.453125	.....	.....	61/64	.953125
.....	15/32	.....	.46875	.....	31/32	.....	.96875
.....	.....	31/64	.484375	.....	.....	63/64	.984375
1/2	.....	.....	.5	.....	.....	.....	.....

TABLE 28

STANDARD WROUGHT IRON PIPE

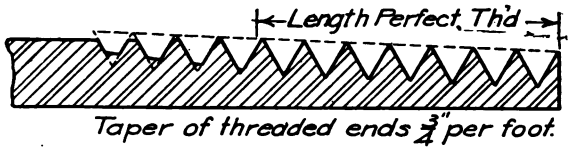

Nominal Size.	¼	⅜	½	¾	1	1¼	1½	2	2½	3	3½	4	4½	5	6	7	8	9	10
Actual inside dia....	.36	.49	.62	.82	1.05	1.38	1.61	2.07	2.47	3.07	3.55	4.03	4.51	5.05	6.07	7.02	7.98	9.00	10.02
Actual outside dia...	.54	.68	.84	1.05	1.32	1.66	1.90	2.38	2.88	3.50	4.00	4.50	5.00	5.56	6.63	7.63	8.63	9.69	10.75
Th'ds per inch.....	18	18	14	14	11½	11½	11½	11½	8	8	8	8	8	8	8	8	8	8	8
Dia. at top of th'd at end.....	.52	.62	.82	1.03	1.28	1.63	1.87	2.34	2.82	3.44	3.94	4.44	4.93	5.49	6.55	7.54	8.53	9.59	10.65
Length perfect th'd..	.29	.30	.39	.40	.51	.54	.55	.58	.89	.95	1.00	1.05	1.10	1.16	1.26	1.36	1.46	1.57	1.68

TABLE 29

CAST IRON FITTINGS

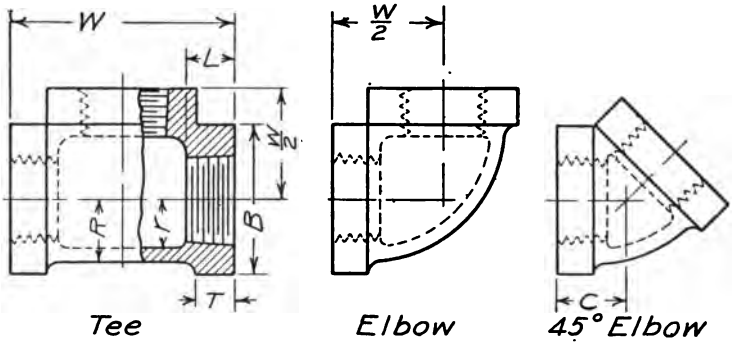

Pipe.	¼	⅜	½	¾	1	1¼	1½	2	2½	3	3½	4	4½	5	6	7	8	9	10
R	$\frac{13}{32}$	$\frac{23}{32}$	$\frac{27}{32}$	$\frac{47}{64}$	$\frac{1}{2}$	$1\frac{1}{16}$	$1\frac{7}{32}$	$1\frac{1}{2}$	$1\frac{7}{8}$	$2\frac{5}{16}$	$2\frac{11}{16}$	$2\frac{1}{8}$	$2\frac{33}{64}$	$3\frac{7}{32}$	$3\frac{7}{8}$	$4\frac{3}{8}$	5	$5\frac{5}{16}$	$6\frac{1}{8}$
r	$\frac{5}{32}$	$\frac{3}{8}$	$\frac{7}{16}$	$\frac{5}{16}$	$\frac{11}{16}$	$\frac{7}{8}$	1	$1\frac{1}{2}$	$1\frac{15}{32}$	$1\frac{31}{32}$	$2\frac{1}{32}$	$2\frac{5}{16}$	$2\frac{1}{2}$	$2\frac{33}{64}$	$3\frac{13}{32}$	$3\frac{37}{64}$	$4\frac{7}{16}$	$4\frac{15}{16}$	$5\frac{7}{16}$
B	1	$1\frac{5}{32}$	$1\frac{7}{16}$	$1\frac{3}{4}$	$2\frac{1}{16}$	$2\frac{1}{2}$	$2\frac{3}{4}$	$3\frac{3}{8}$	$4\frac{1}{8}$	$4\frac{3}{4}$	$5\frac{5}{16}$	6	$6\frac{9}{16}$	$7\frac{1}{16}$	$8\frac{1}{8}$	$9\frac{1}{4}$	$10\frac{1}{2}$	$12\frac{1}{8}$	$13\frac{1}{2}$
T	$\frac{1}{4}$	$\frac{5}{16}$	$\frac{3}{8}$	$\frac{7}{16}$	$\frac{1}{2}$	$\frac{9}{16}$	$\frac{5}{8}$	$\frac{11}{16}$	$\frac{13}{16}$	$\frac{15}{16}$	1	$1\frac{1}{16}$	$1\frac{1}{8}$	$1\frac{3}{16}$	$1\frac{5}{16}$	$1\frac{7}{16}$	$1\frac{5}{8}$	$1\frac{7}{16}$	$1\frac{7}{8}$
L	$\frac{3}{8}$	$\frac{7}{16}$	$\frac{1}{2}$	$\frac{9}{16}$	$\frac{5}{8}$	$\frac{13}{16}$	$\frac{15}{16}$	$\frac{7}{8}$	1	1	$1\frac{1}{16}$	$1\frac{1}{8}$	$1\frac{1}{4}$	$1\frac{3}{8}$	$1\frac{5}{8}$	$1\frac{3}{4}$	$1\frac{7}{8}$	$1\frac{7}{8}$	$1\frac{7}{8}$
W	$1\frac{1}{2}$	$1\frac{23}{32}$	$2\frac{1}{16}$	$2\frac{3}{8}$	$3\frac{1}{16}$	$3\frac{3}{8}$	4	$4\frac{3}{4}$	$5\frac{3}{4}$	$6\frac{3}{4}$	$7\frac{7}{16}$	$8\frac{1}{16}$	$8\frac{13}{16}$	$9\frac{5}{16}$	$10\frac{5}{8}$	$12\frac{1}{8}$	$13\frac{3}{8}$	15	$16\frac{1}{2}$
C	$\frac{7}{16}$	$\frac{9}{16}$	$\frac{11}{16}$	$\frac{13}{16}$	$\frac{15}{16}$	$1\frac{1}{16}$	$1\frac{3}{16}$	$1\frac{3}{8}$	$1\frac{5}{8}$	$1\frac{7}{8}$	$2\frac{1}{16}$	$2\frac{1}{4}$	$2\frac{7}{16}$	$2\frac{5}{16}$	$2\frac{13}{16}$	$3\frac{1}{4}$	$3\frac{5}{16}$	$3\frac{7}{8}$	$4\frac{5}{16}$

INDEX

Acme Threads, 131.
  conventions for, 18.
Alterations, 70.
Angles, dimensions of, 35.
Arrangement of views, 67.
Assembled details, 66.
Assembly drawing, order of procedure, 82.
Assembly drawings, 81.
Axonometric drawings, 1.

Bearings, conventions for, 20.
Belt holes, 94.
  quarter turn, 92.
  reversible quarter turn, 95.
Boiler plate, 10.
Bolt head, manufacturers' standard, 124.
  U. S. Standard hexagon, 122.
  U. S. Standard square, 123.
Bolts, conventions for, 19.
  dimensions of, 35.
Border lines, 63.
Breaking long pieces, 19.
Brown & Sharpe tapers, 134.

Cabinet drawings, 1, 117.
Cap screws, 126, 127.
Cam, cylindrical, 100.
  plate, 95.
Chain, convention for, 19.
Check nuts, 125.
Conventions, general, 12.
  special, 12.
Cotter pins, split, 132.
Counterbore to surface, 47.
Crosshatching, 10, 121.
Curves, radii of, 26.

Decimal equivalents, 139.
Decimals, use of, 24.
Design drawings, 81, 85.
Detail drawings, 62.
Details, assembled, 66.
Diagrammatic drawings, 81, 92.
Diagrams, velocity, 100.
Dimensioning, general example, 22.
Dimensions, allowable variation, 45.
  of bolts and nuts, 35.
  of curves and fillets, 26.
  of cylindrical pieces, 25.
  decimal, 24.
  feet and inches, 23.
  of fits, 38.
  of holes, 28.
  not to scale, 24.
  on reduced scale drawing, 24.
  overall, 46.
  position of, 22.
  of pulleys and gears, 38.
  repetition of, 23.
  of screws, 28.
  of shafts, 25.
  of tapers and angles, 35.

Elevation, 3.

Filing numbers, 68.
Fillets, radii of, 26.
Finish, how to indicate, 46.
Fittings, cast iron, 140.
Fits, dimensions of, 38.

Gauge, Morse twist drill and steel wire, 138.
  Stubs' steel wire, 138.
Gauges, plate and wire, 137.
Gears, dimensions of, 38.
General drawings, 81.
Grouping of pieces on sheet, 65.

Holes, describing, 31.
  dimensioning, 28.
  locating, 32.
  not symmetrically located, 34.
  symmetrically located, 33.
  for taper pins, 38.
Horizon plane, 103.

Ink drawing, 62, 79.
Invisible lines, 6.
  parts, 6.
Isometric drawing, 1, 112.

Jam nuts, 125.
Jarno tapers, 133.

Keys for machine tools, 135.
  for shafting, 135.
  Whitney, 136.

Layout drawings, 81.
Lettering, 71.
Line shading, 74.
Lines, dotted, 6.
  invisible, 6.
  kinds of, 73.
List of parts, 70.

Machine number, 80.
Machine screws, 128.
Material, how to indicate, 48.
Morse tapers, 134.

Name of part, 49.
Notes, use of, 50.
Number wanted, 48.
Numbers, piece and filing, 68.
Nuts, check and jam, 125.
  conventions for, 19.
  dimensioning, 35.
  manufacturers' standard, 125.
  Society of Automobile Engineers, 129.
  U. S. Standard hexagon, 122.
  U. S. Standard square, 123.

Oblique projection, 1, 116.
Orthographic projection, 2.
Outline drawings, 81, 84.
Overall dimensions, 46.

Parallel perspective, 112.
Part number, 49.
Partial sections, 9.
Parts, list of, 70.
Pencil drawing, 62, 74.
Perspective drawing, 1.
  mechanical, 101.
  parallel, 112.
Picture plane, 103.
Piece numbers, 68.
Pieces, closely related, 67.
Pins, split cotter, 132.
  taper, 133.
Pipe, cast iron fittings for, 140.
  standard wrought iron, 140.
Pipe threads, conventions for, 18.
Plan, 3.
Projection, fundamental idea of, 2.
Projection planes not at right angles, 6.
Pulleys, dimensions of, 38.

Related pieces, 67.
Rope, convention for, 19.

Scales, 70.
Screws, dimensioning, 28.
  long, 18.
  machine, 128.
  cap, 126, 127.
  set, 127.
  Society of Automobile Engineers, 129.
Screw threads, acme, 131.
    convention for, 12.
    square, 131.
    U. S. standard, 130.
    Whitworth Standard, 130.
Section lining, 121.
Sectioning, boiler plate, 10.
Sections, described, 7.
  partial, 9.
Section through web, 20.
  turned up, 9.
Set screws, 127.
Shade lines, 74.
Shading, line, 74.
Sheet size, 62.
Sketch, described, 55.
Sketching, method of procedure, 58.
Society of Automobile Engineers, screws and
      nuts, 129.
Special threads, 18.
Spot face, 47.
Springs, convention for, 18.
Square threads, 131.
  conventions for, 18.
Standard parts, 48.
Station point, 104.
Stumping, 10.
Systems, drafting room, 62.

Taper pins, 133.
holes for, 38.
Tapers, Brown & Sharpe, 134.
dimensioning of, 35.
Jarno, 133.
Morse, 134.
Threads, conventions for, 12. *See also* screw threads.
Tinting, 10.
Titles, 63.
Tracing, 62, 79.
Turned-up section, 9.

Vanishing point, 104.
Velocity diagrams, 100.
Views, arrangement of, 67.
connecting the, 11.
Views, elevation, 3.
end elevation, 4.
partial, 6.
plan, 3.
relative location of, 5.
sectional, 8.
selection of, 6.
side elevation, 4.
V-threads, conventions, 12.

Washers, punched, manufacturers' standard, 132.
Webs, etc., section through, 20.
Whitney keys, 136.
Wire gauges, 137, 138.
Woodruff keys, 136.
Wrought iron pipe, 140.

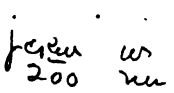

89088911706

b89088911706a

89088911706

b89088911706a

89088911706

B89088911706A